PRINCETON UNIVERSITY

High Frequency Power Electronics at the Grid Edge: Opportunities and Challenges

Minjie Chen, Princeton University

NSF Workshop on Power Electronics-enabled Operation of Power Systems

With insights from: Dushan Boroyevich (VT), Jian Sun (RPI), Xiongfei Wang (Aalborg), Xiaonan Lu (Temple), and Qing-Chang Zhong (IIT)

Princeton Power Electronics Research Lab

PRINCETON UNIVERSITY

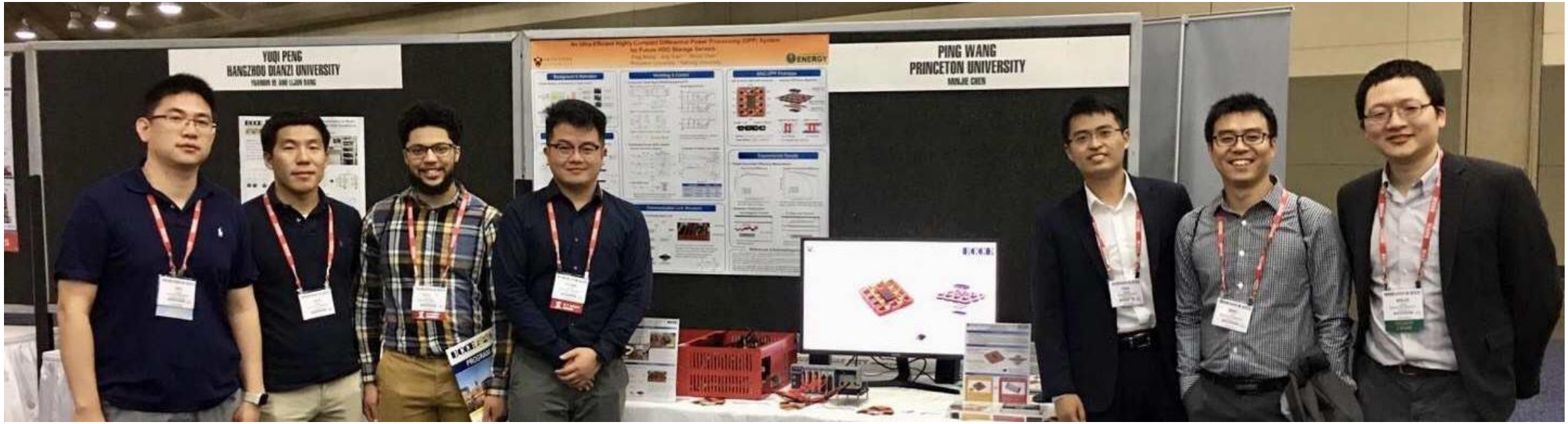

High Frequency, miniaturized power electronics for emerging applications

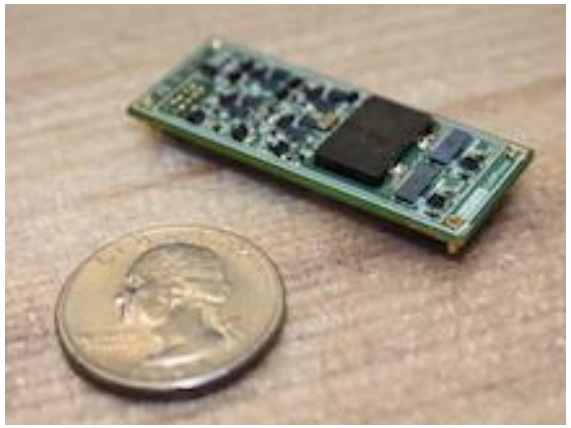

Telecom

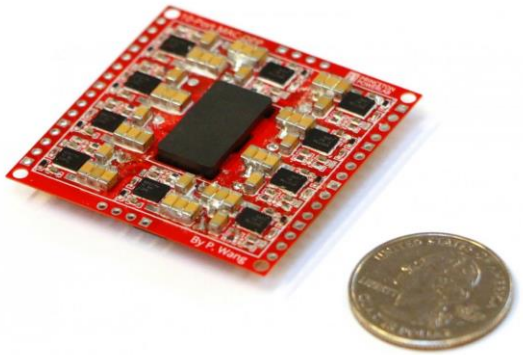

Data Center / Point-of-Load

Robotics & Biomedical

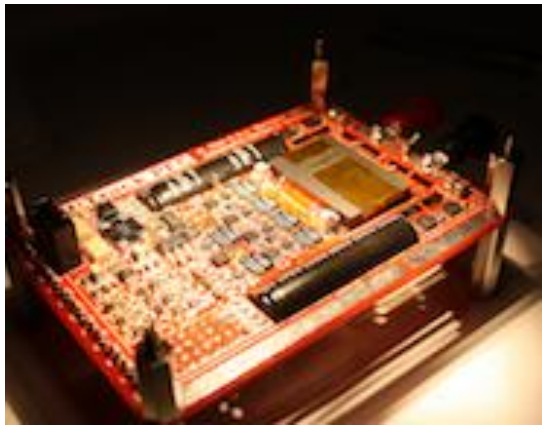

HF Grid Interface

Better Power Electronics for Better Power Systems

PRINCETON UNIVERSITY

- **Smaller:** Higher switching frequency
- **Smarter:** Architecture and control
- **More efficient:** New devices and topologies
- <u>A lot of opportunities at the grid edge</u>

Power Systems

Power Electronics

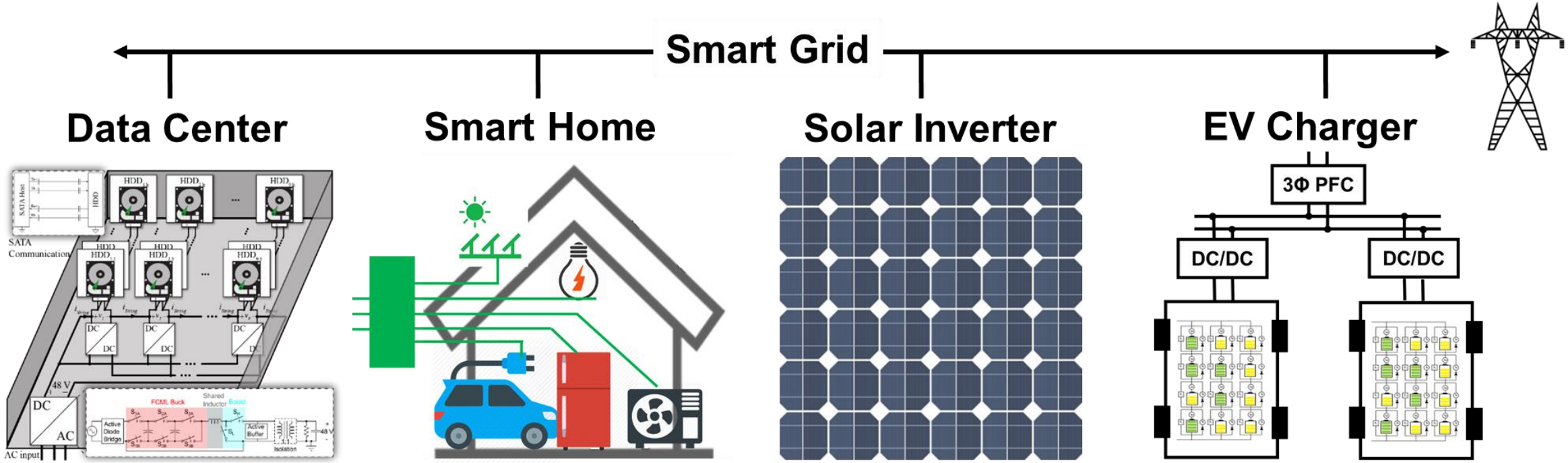

Why High Frequency Power Electronics?

PRINCETON UNIVERSITY

- Fundamental ways to improve performance and reduce size / cost
- Leveraging wide-band-gap semiconductor devices & magnetics
- “10 years later, probably 5 MHz is not considered HF”?

Thyristor
1950s

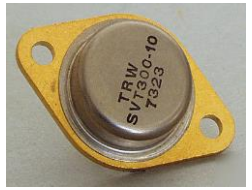

BJT
1960s

MOSFET
1990s

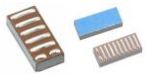

GaNFET
2010s

We will see PV inverters and PFCs running above 5 MHz in 10 years

60 Hz → 10 kHz → 100 kHz → 1 MHz → 5 MHz ?

[1] D. J. Perreault et al., “Opportunities and Challenges in Very High Frequency Power Conversion,” APEC 09.
[2] J. D. van Wyk and F. C. Lee, “On a Future for Power Electronics,” JESTPE 13.

Advantages of High Frequency Grid Interface

- Grid-tied power electronics become more "ideal" at higher switching frequencies

- Higher control bandwidth at the edge
  - *Edge sensing (impedance measurement)*
  - *Edge actuation (impedance synthesize)*

- Advantages include
  - *Faster and more precise control*
  - *Lower risk of inverter oscillation*
  - *Faster response to load variation and intermittency*
  - *Modular design and scalability*

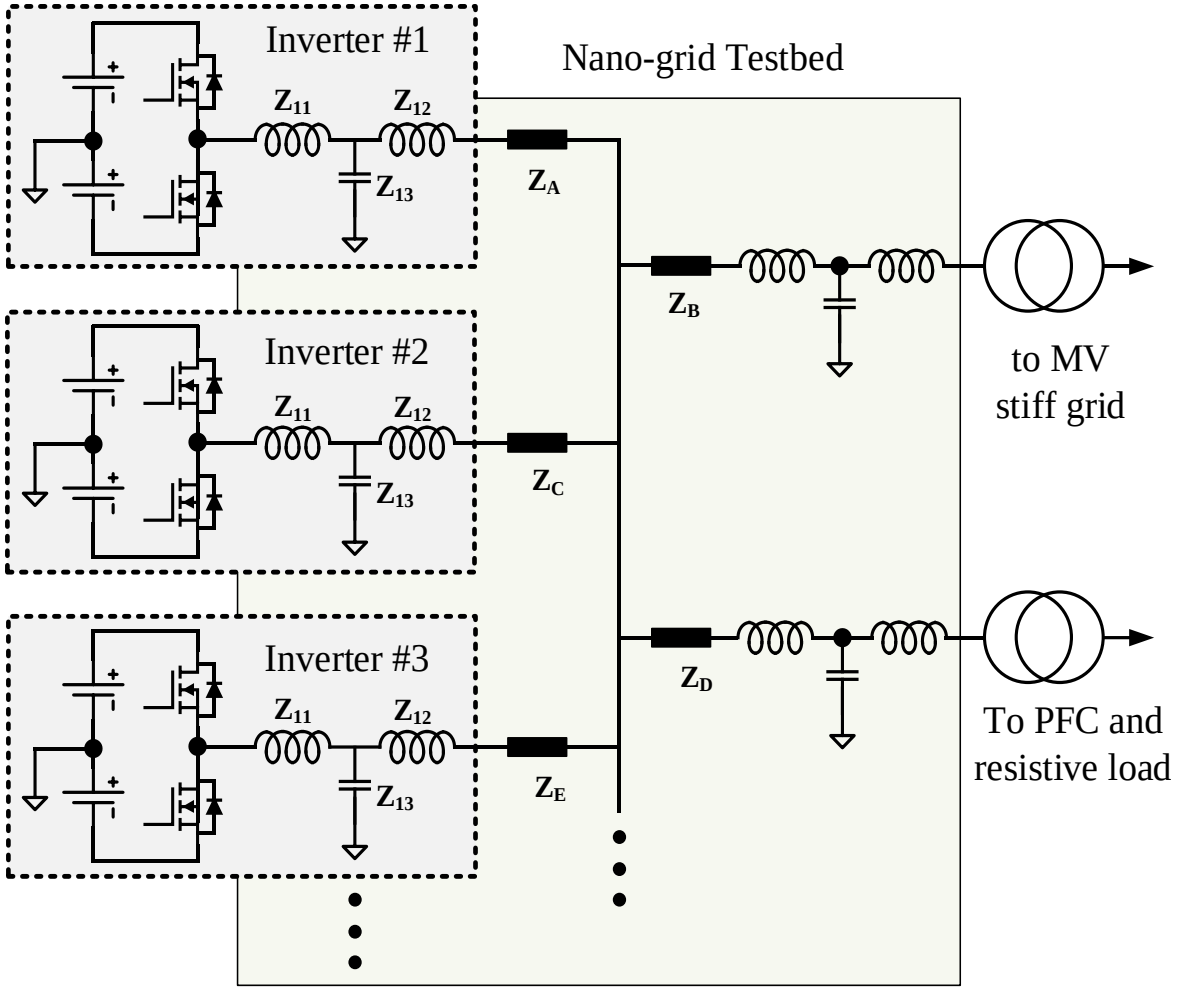

A Nano Grid Supported by HF Power Electronics

Challenges of High Frequency Grid Interface

- PWM operation v.s. Resonant operation
- Continuous conduction mode v.s. Discontinuous conduction mode
- Fixed frequency v.s. Variable frequency
- EMI filter design and oscillation problems (non LCL filters)

Will this 5 MHz PFC be compatible with the future grid? What is the grid-interface rule?

- 1MHz-5MHz
- Resonant ZVS DCM
- Variable Frequency

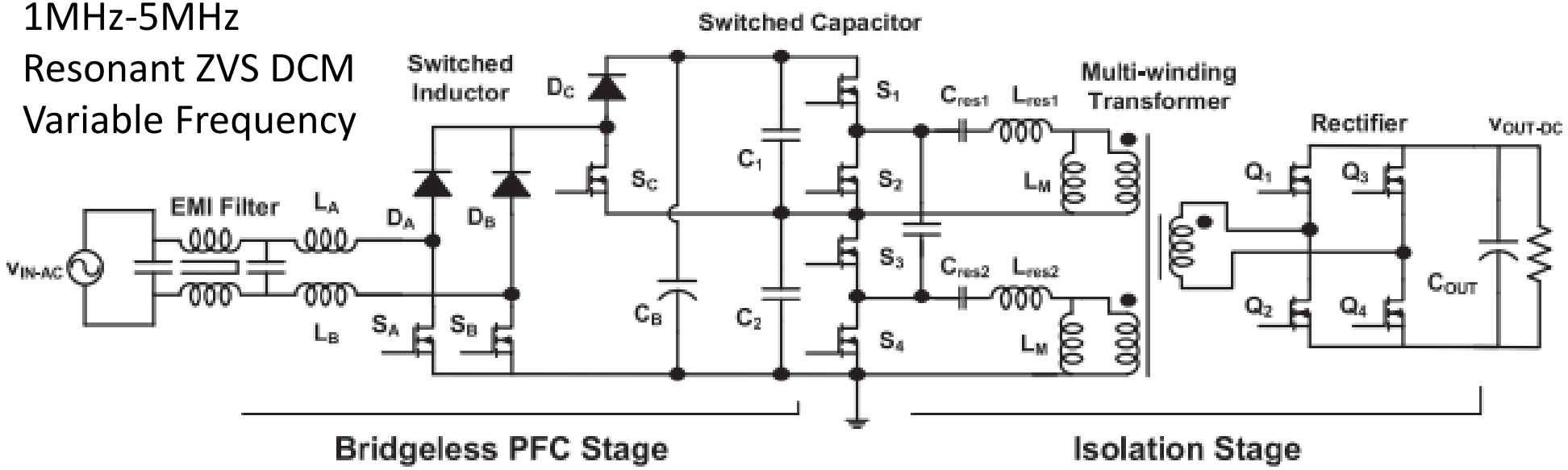

[3] M. Chen, S. Chakraborty and D. J. Perreault, "Multitrack Power Factor Correction Architecture," TPEL 19.

One Possible Architecture of the Future Grid

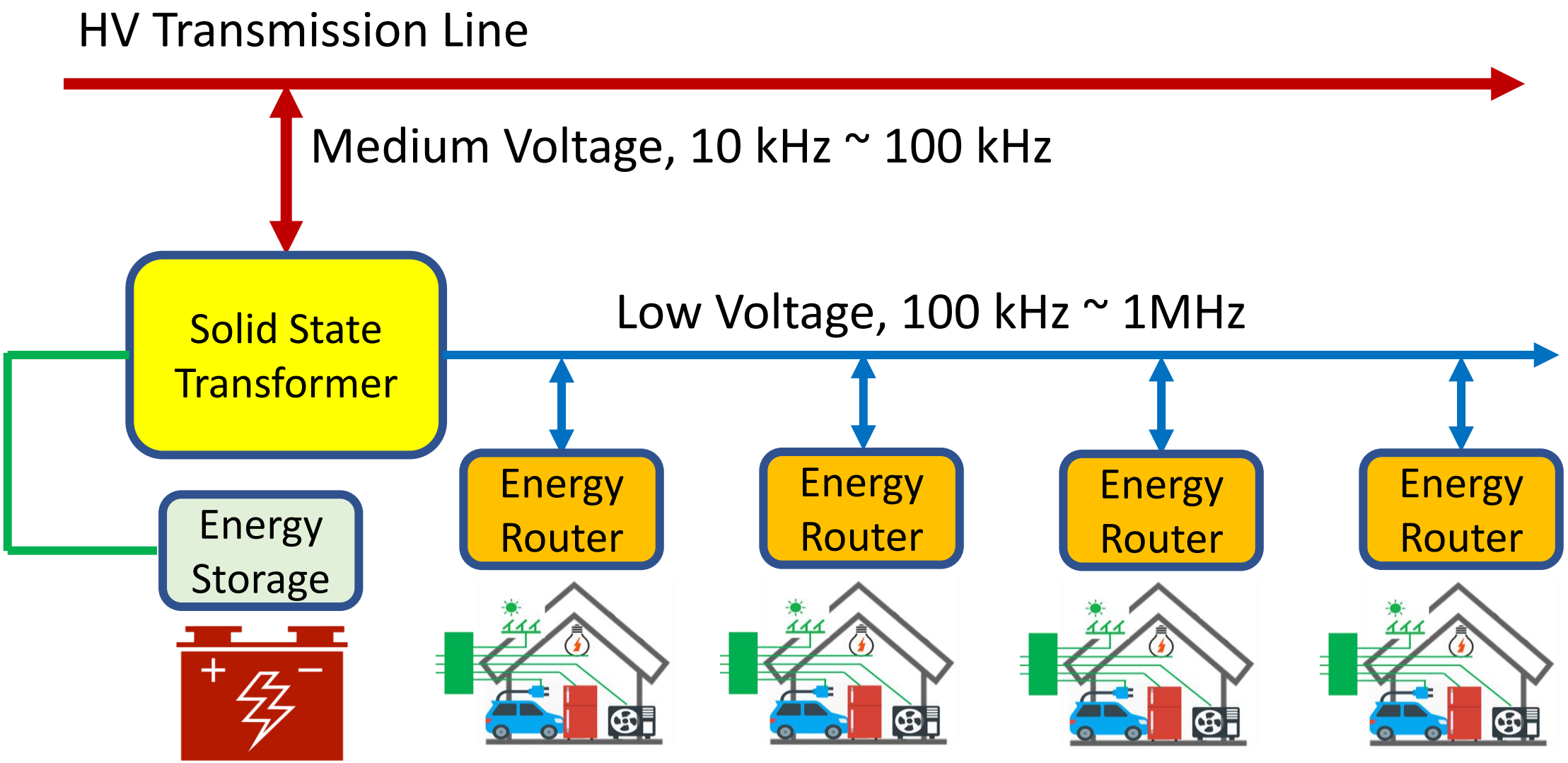

[4] D. Divan, R. Moghe and A. Prasai, “Power Electronics at the Grid Edge : The key to unlocking value from the smart grid,” in IEEE Power Electronics Magazine, vol. 1, no. 4, pp. 16-22, Dec. 2014.

High Frequency Power Electronics at the Grid Edge

PRINCETON UNIVERSITY

- Research Project 1: High Frequency Multiport Grid Interface
- Research Project 2: Low Voltage DC Energy Router in Smart Homes
- Research Project 3: Energy Buffer / Storage and Reactive Power Support

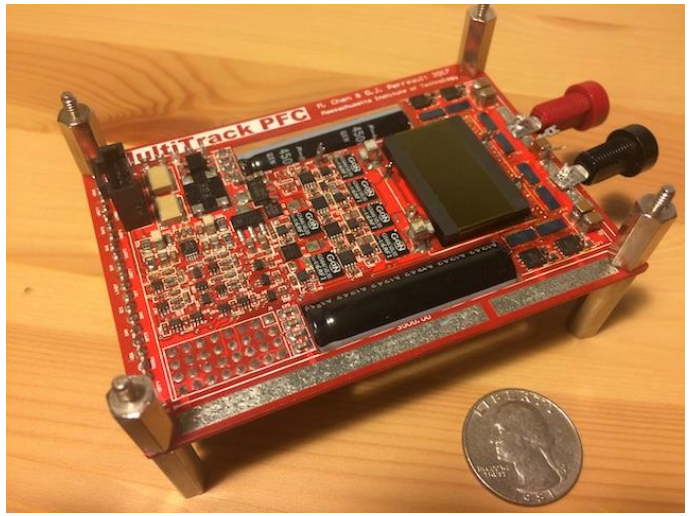

High Frequency MHz level Multiport Grid Interface

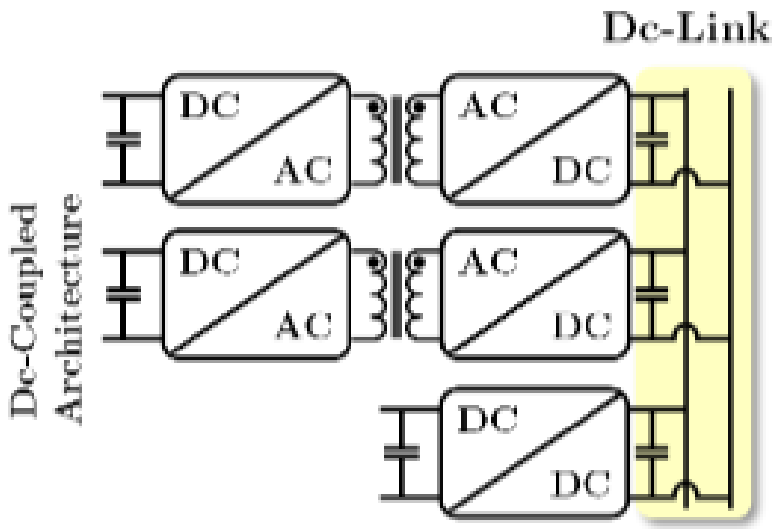

Low Voltage DC Energy Router in Smart Homes

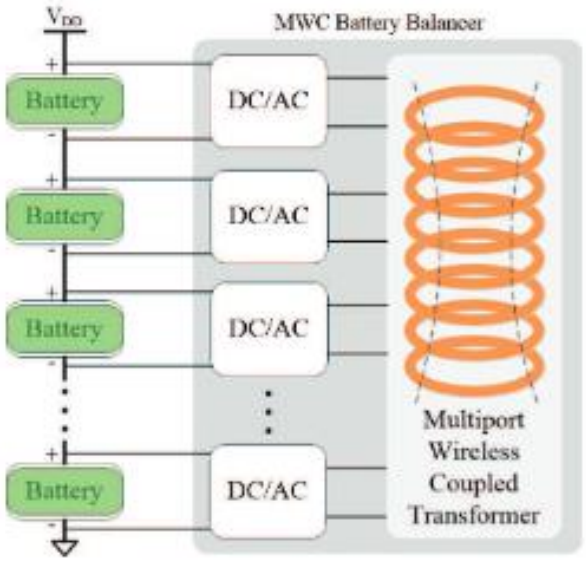

Energy Buffer / Storage and Synthetic Impedance

High Frequency Sophisticated Grid Interface Systems

PRINCETON UNIVERSITY

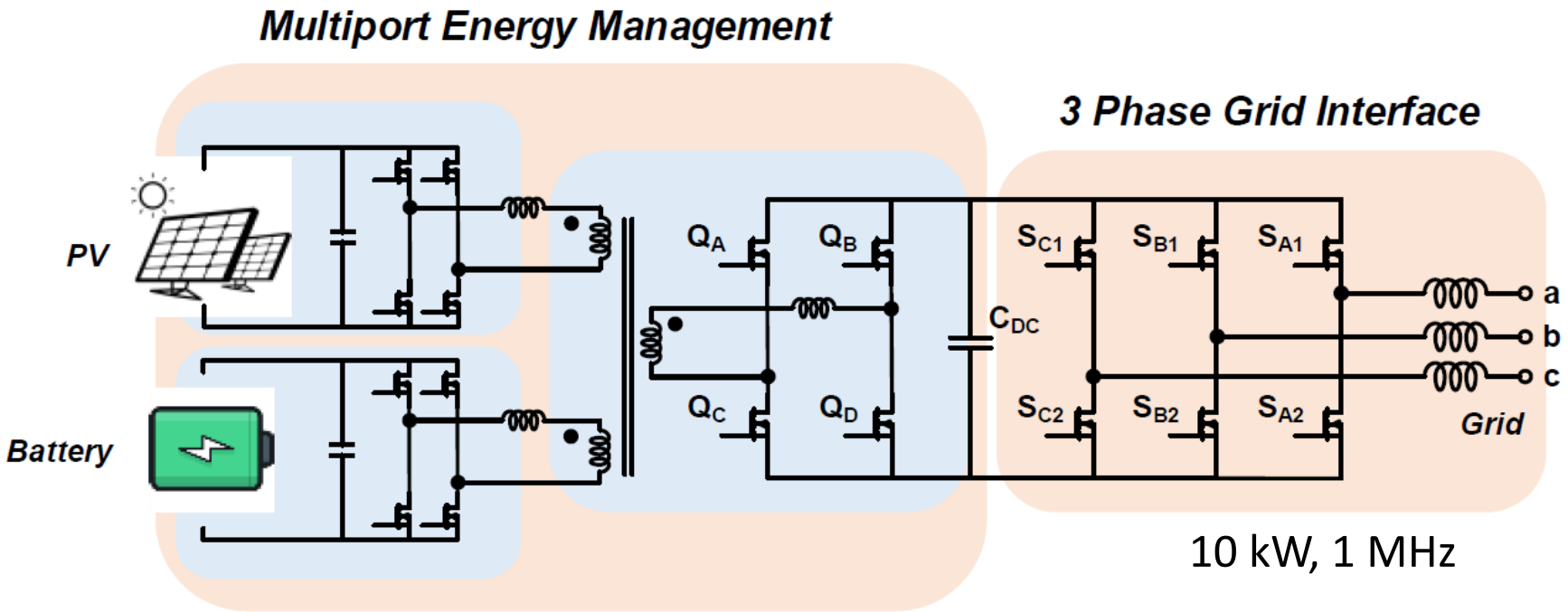

10 kW, 1 MHz

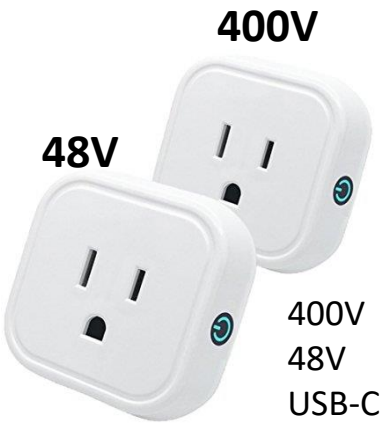

Smart outlets with multiple voltage modes

High Frequency Grid Interface Power Electronics

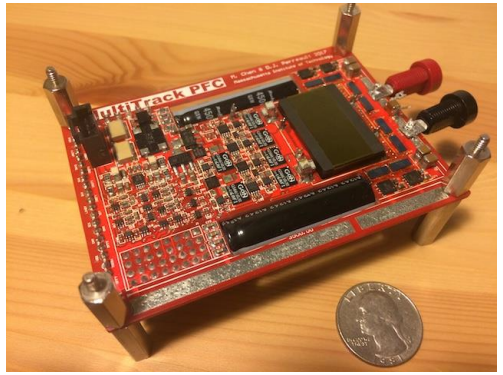

Multiway Power Flow and Battery Health Monitoring

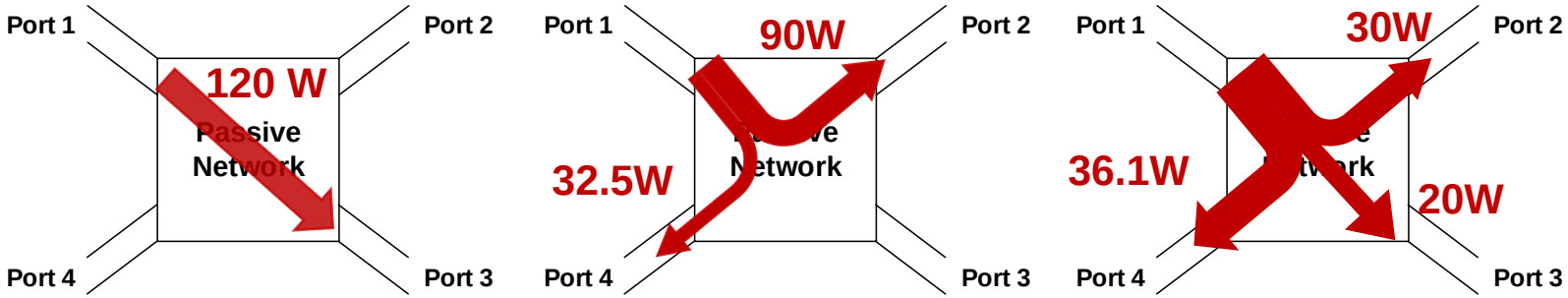

On-line High Frequency Grid Impedance Spectroscopy (on-going work)

[5] Y. Chen, P. Wang, H. Li, and M. Chen, "Power Flow Control in Multi-Active-Bridge Converters: Theories and Applications," APEC 2019.

Power Electronics Building Blocks for Energy Routers

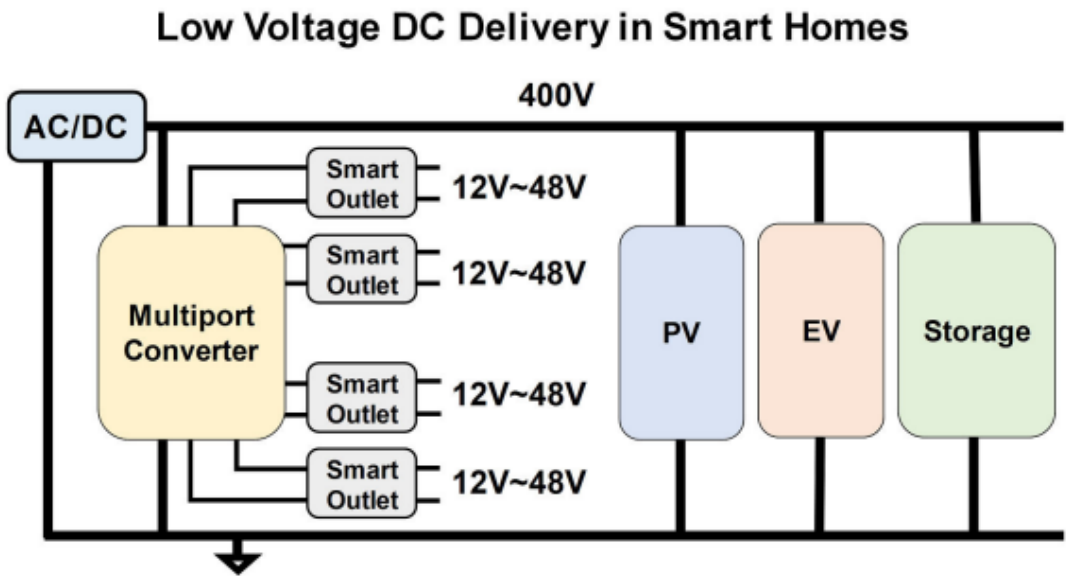

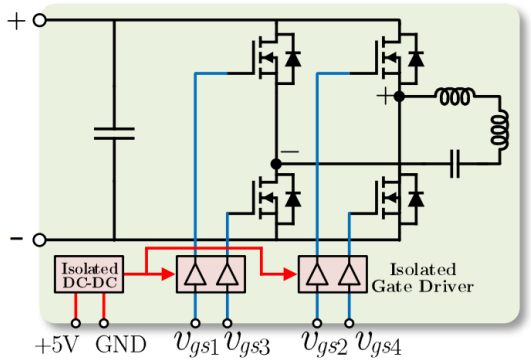

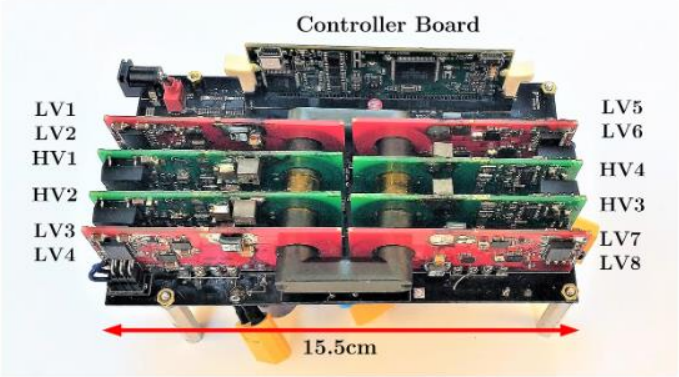

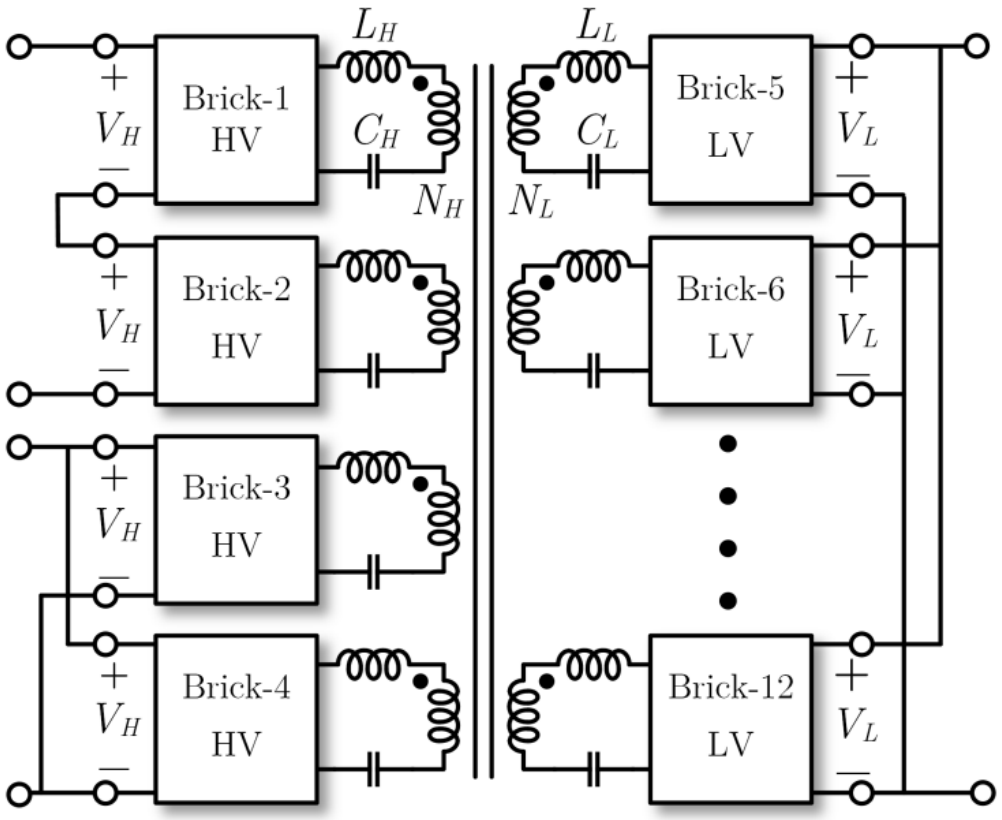

Multiport Reconfigurable Power Electronics Building Blocks [2, 3]

[6] Y. Chen, P. Wang, Y. Elasser, and M. Chen, "LEGO-MIMO Architecture: A Universal Multi-Input Multi-Output (MIMO) Power Converter with Linear Extendable Group Operated (LEGO) Power Bricks," ECCE 2019.

Energy Buffer, Storage & Reactive Power Support

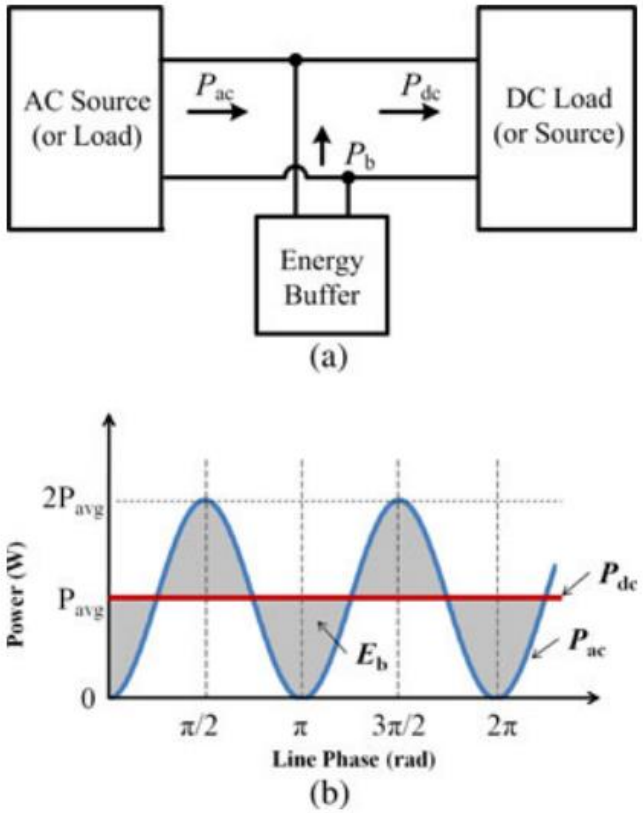

Stacked Switched Capacitor Energy Buffer Architecture

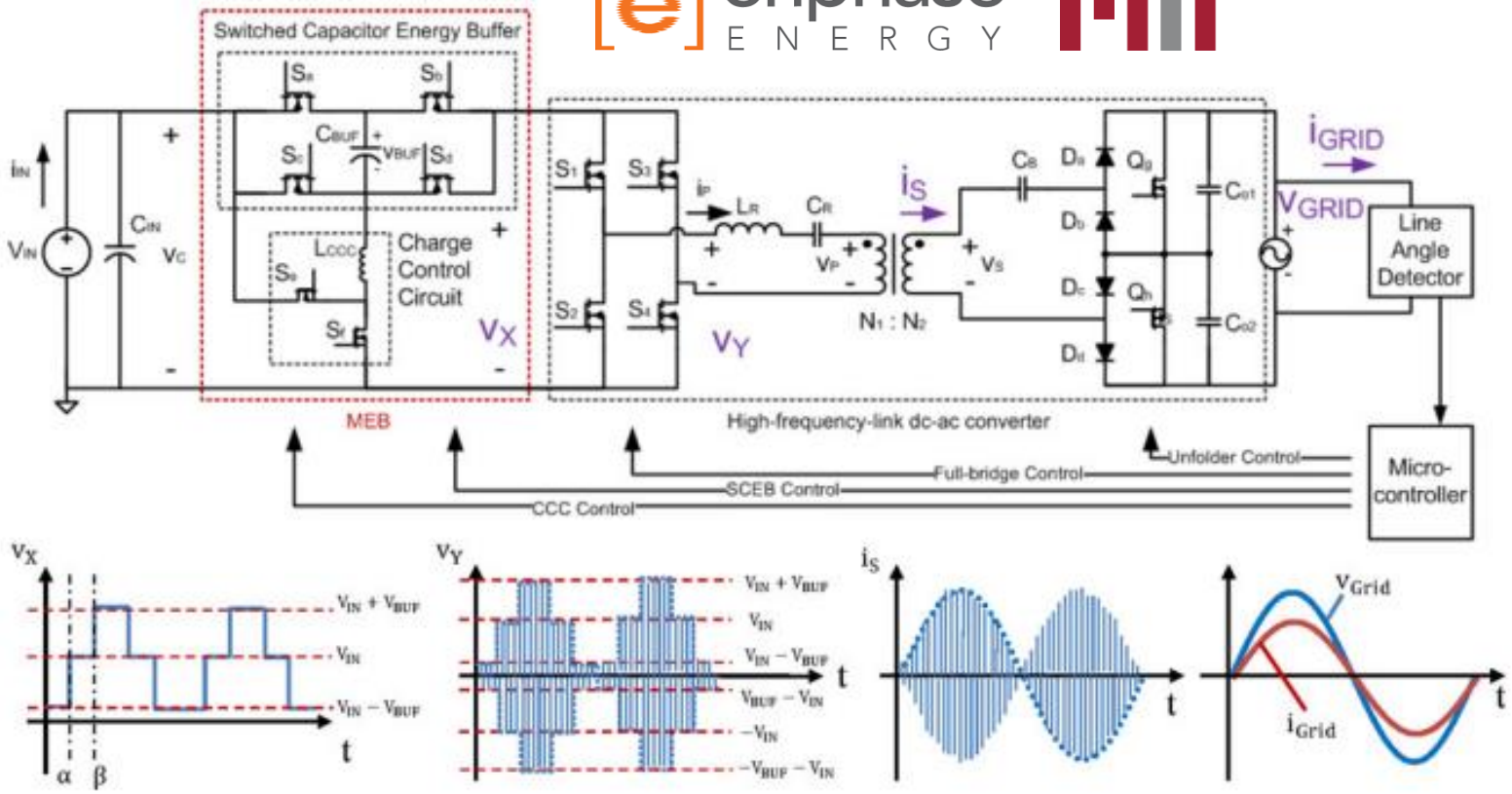

A grid-interface PV inverter that can perform reactive power compensation with a novel switched-capacitor energy buffer architecture

[7] M. Chen, K. K. Afridi, and D. J. Perreault, "Stacked Switched Capacitor Energy Buffer Architecture," TPEL 13.
[8] M. Chen, K. K. Afridi, and D. J. Perreault, "A Multilevel Energy Buffer and Voltage Modulator for Grid-Interfaced Micro-inverters," TPEL 15.
[9] Q. Zhong and W. Ming, "A θ-Converter That Reduces Common Mode Currents, Output Voltage Ripples, and Total Capacitance Required," TPEL16.

Other Functions that HF Power Electronics bring

PRINCETON UNIVERSITY

PFC Current Shaping

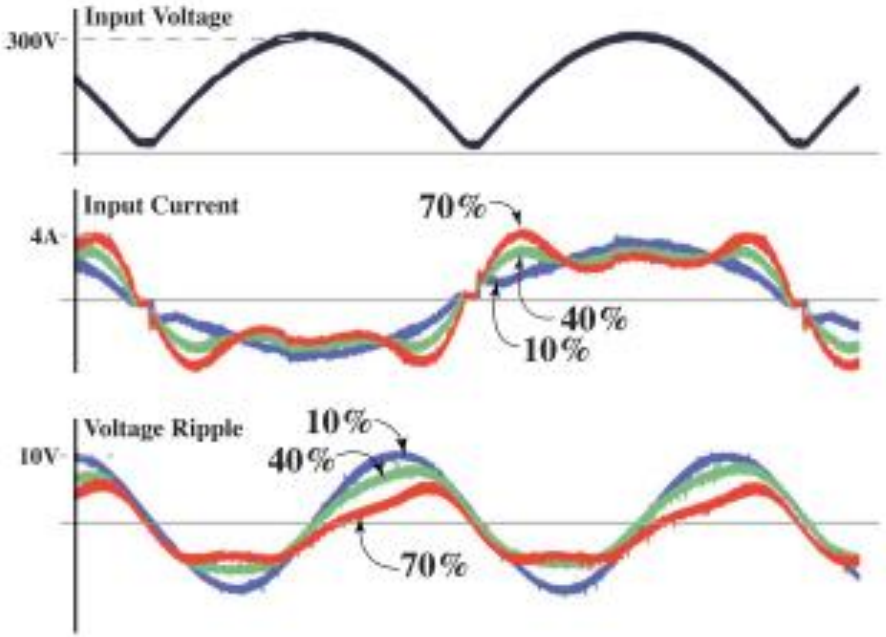

Grid Impedance Measurement

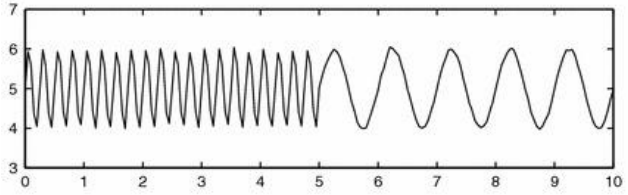

Sinusoidal excitation

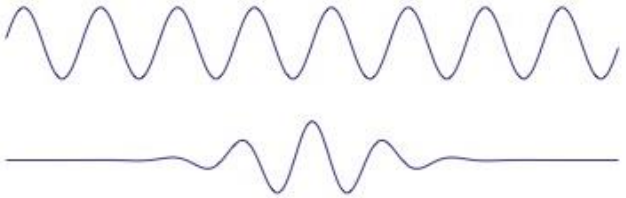

Wavelet excitation

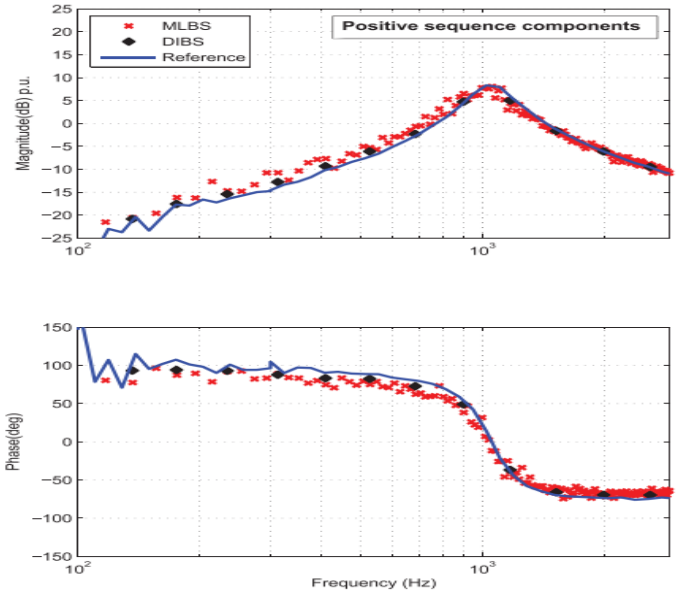

Systematic modeling and analysis methodologies are still needed

How do we include these into future system operation rules / standards?

[10] A. J. Hanson, A. F. Martin and D. J. Perreault, “Energy and Size Reduction of Grid-Interfaced Energy Buffers Through Line Waveform Control,” TPEL 19.

[11] T. Roinila, M. Cespedes and J. Sun, “Online grid impedance measurement using discrete-interval binary sequence injection,” JESTPE 14.

Optimal Placement of the "Sensors" and "Actuators"

PRINCETON UNIVERSITY

- Many emerging work on impedance-based stability criteria
- Actively "probe" the distribution grid with impedance measurement
- Stabilize the grid, damp the oscillation with synthesized impedance
- Optimal location of the "sensors" and "actuators"

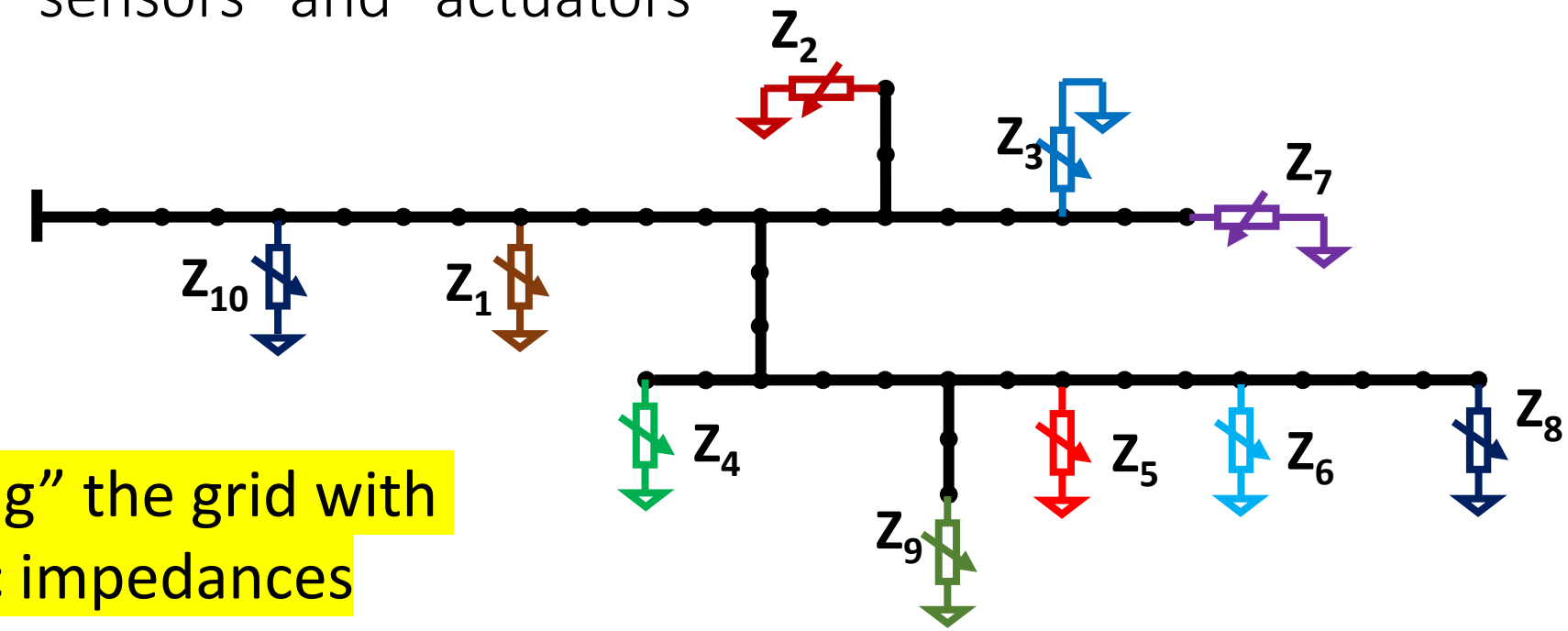

"Sensing" and "actuating" the grid with large signal synthetic impedances

[12] X. Wang, F. Blaabjerg and W. Wu, "Modeling and Analysis of Harmonic Stability in an AC Power-Electronics-Based Power System," TPEL 14.
[13] D. Boroyevich, I. Cvetković, D. Dong, R. Burgos, F. Wang and F. Lee, "Future electronic power distribution systems a contemplative view," 2010 12th International Conference on Optimization of Electrical and Electronic Equipment, Basov, 2010, pp. 1369-1380.

Data Center as a Testbed for Grid Innovations

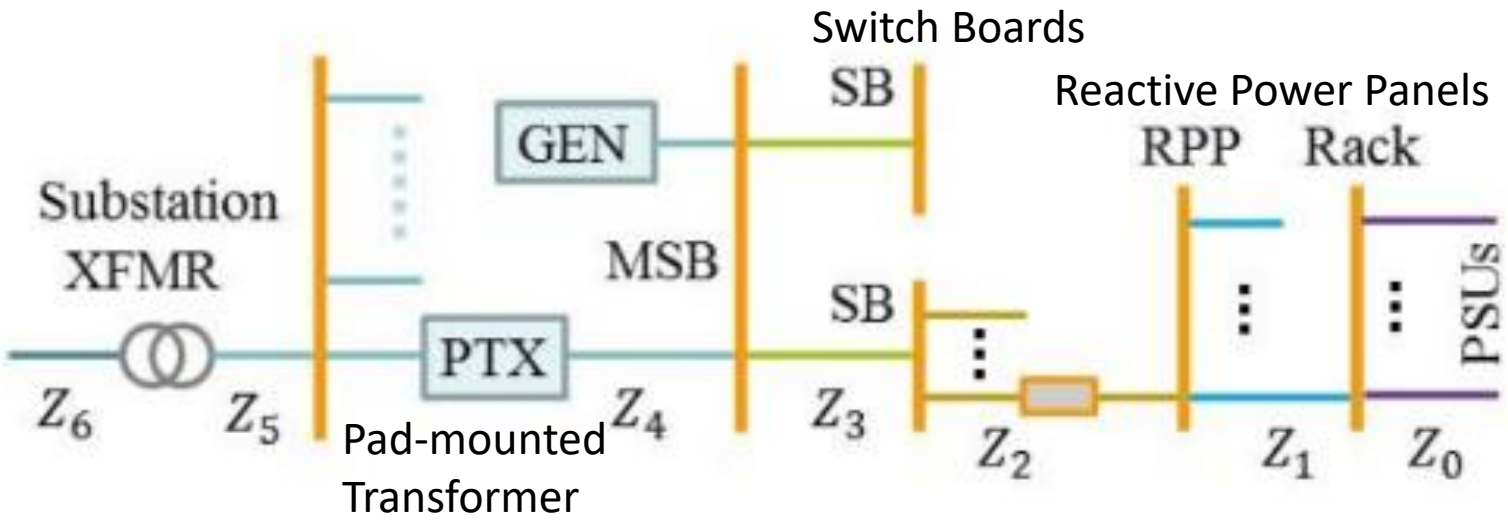

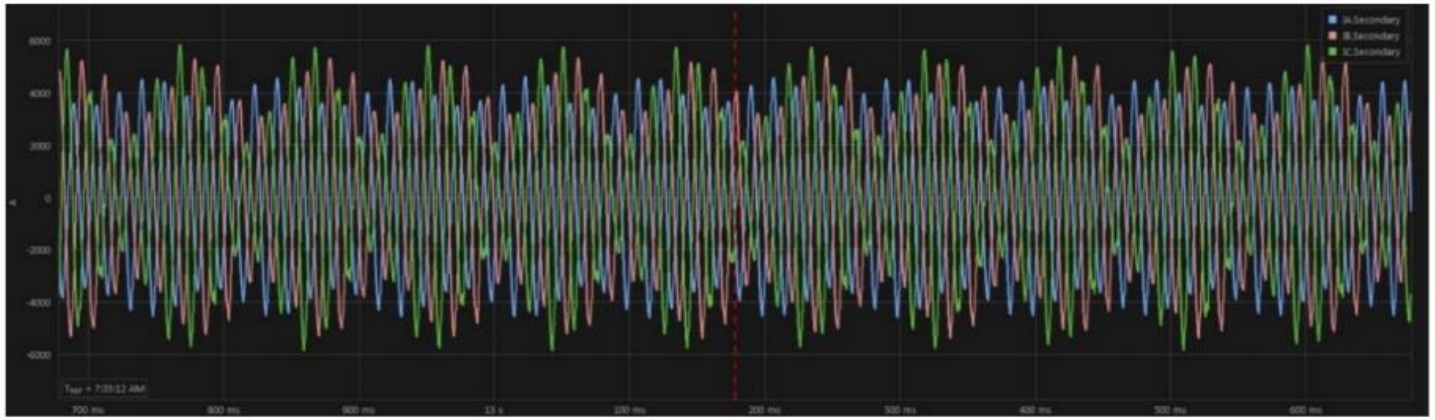

Measured low frequency system oscillation in data centers

[14] J. Sun, M. Xu, M. Cespedes, D. Wong and M. Kauffman, “Modeling and Analysis of Data Center Power System Stability by Impedance Methods,” ECCE 19.
[15] J. Sun, M. Xu, M. Cespedes, D. Wong and M. Kauffman, “Low-Frequency Input Impedance Modeling of Single-Phase PFC Converters for Data Center Power System Stability Studies,” ECCE 19.

A Bottom-Up Approach Towards the Smart Grid

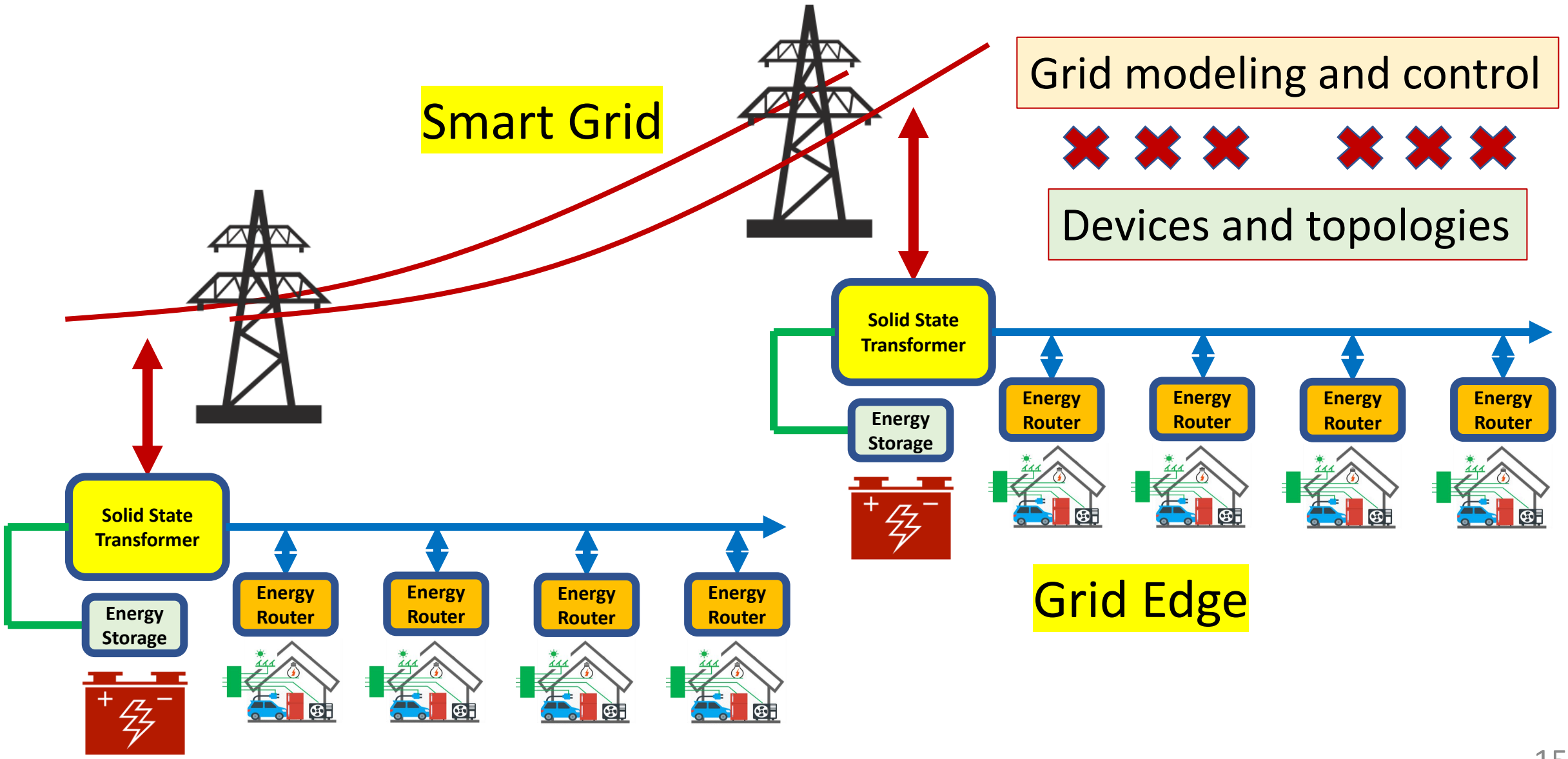

References

[1] D. J. Perreault et al., “Opportunities and Challenges in Very High Frequency Power Conversion,” APEC 09.

[2] J. D. van Wyk and F. C. Lee, “On a Future for Power Electronics,” JESTPE 13.

[3] M. Chen, S. Chakraborty and D. J. Perreault, “Multitrack Power Factor Correction Architecture,” TPEL 19.

[4] D. Divan, R. Moghe and A. Prasai, “Power Electronics at the Grid Edge : The key to unlocking value from the smart grid,” in IEEE Power Electronics Magazine, vol. 1, no. 4, pp. 16-22, Dec. 2014.

[5] Y. Chen, P. Wang, H. Li, and M. Chen, “Power Flow Control in Multi-Active-Bridge Converters: Theories and Applications,” APEC 19.

[6] Y. Chen, P. Wang, Y. Elasser, and M. Chen, “LEGO-MIMO Architecture: A Universal Multi-Input Multi-Output (MIMO) Power Converter with Linear Extendable Group Operated (LEGO) Power Bricks,” ECCE 19.

[7] M. Chen, K. K. Afridi, and D. J. Perreault, “Stacked Switched Capacitor Energy Buffer Architecture,” TPEL 13.

[8] M. Chen, K. K. Afridi, and D. J. Perreault, “A Multilevel Energy Buffer and Voltage Modulator for Grid-Interfaced Micro-inverters,” TPEL 15.

[9] Q. Zhong and W. Ming, “A θ-Converter That Reduces Common Mode Currents, Output Voltage Ripples, and Total Capacitance Required,” TPEL 16.

[10] A. J. Hanson, A. F. Martin and D. J. Perreault, “Energy and Size Reduction of Grid-Interfaced Energy Buffers Through Line Waveform Control,” TPEL 19.

[11] T. Roinila, M. Cespedes and J. Sun, “Online grid impedance measurement using discrete-interval binary sequence injection,” JESTPE 14.

[12] X. Wang, F. Blaabjerg and W. Wu, “Modeling and Analysis of Harmonic Stability in an AC Power-Electronics-Based Power System,” TPEL 14.

[13] D. Boroyevich, I. Cvetković, D. Dong, R. Burgos, F. Wang and F. Lee, “Future electronic power distribution systems a contemplative view,” 2010 12th International Conference on Optimization of Electrical and Electronic Equipment, Basov, 2010, pp. 1369-1380.

[14] J. Sun, M. Xu, M. Cespedes, D. Wong and M. Kauffman, “Modeling and Analysis of Data Center Power System Stability by Impedance Methods”, ECCE 19.

[15] J. Sun, M. Xu, M. Cespedes, D. Wong and M. Kauffman, “Low-Frequency Input Impedance Modeling of Single-Phase PFC Converters for Data Center Power System Stability Studies,” ECCE 19.