Multi-Scale Control of Power Electronics for Power Systems

Sudip K. Mazumder, Fellow, IEEE

Distinguished Lecturer, IEEE Power Electronics Society
Editor-at-Large, IEEE Transactions on Power Electronics
Chair, IEEE PELS TC on Sustainable Energy Systems

Director, Lab for Energy and Switching-Electronics Systems (LESES)
Professor, Department of Electrical and Computer Engineering
University of Illinois at Chicago

President, NextWatt LLC

Acknowledgements: NSF, ONR, ARPA-E, DOE

NSF Workshop
IIT, Chicago, Illinois
2019

Power Electronics for Power Systems: Overview

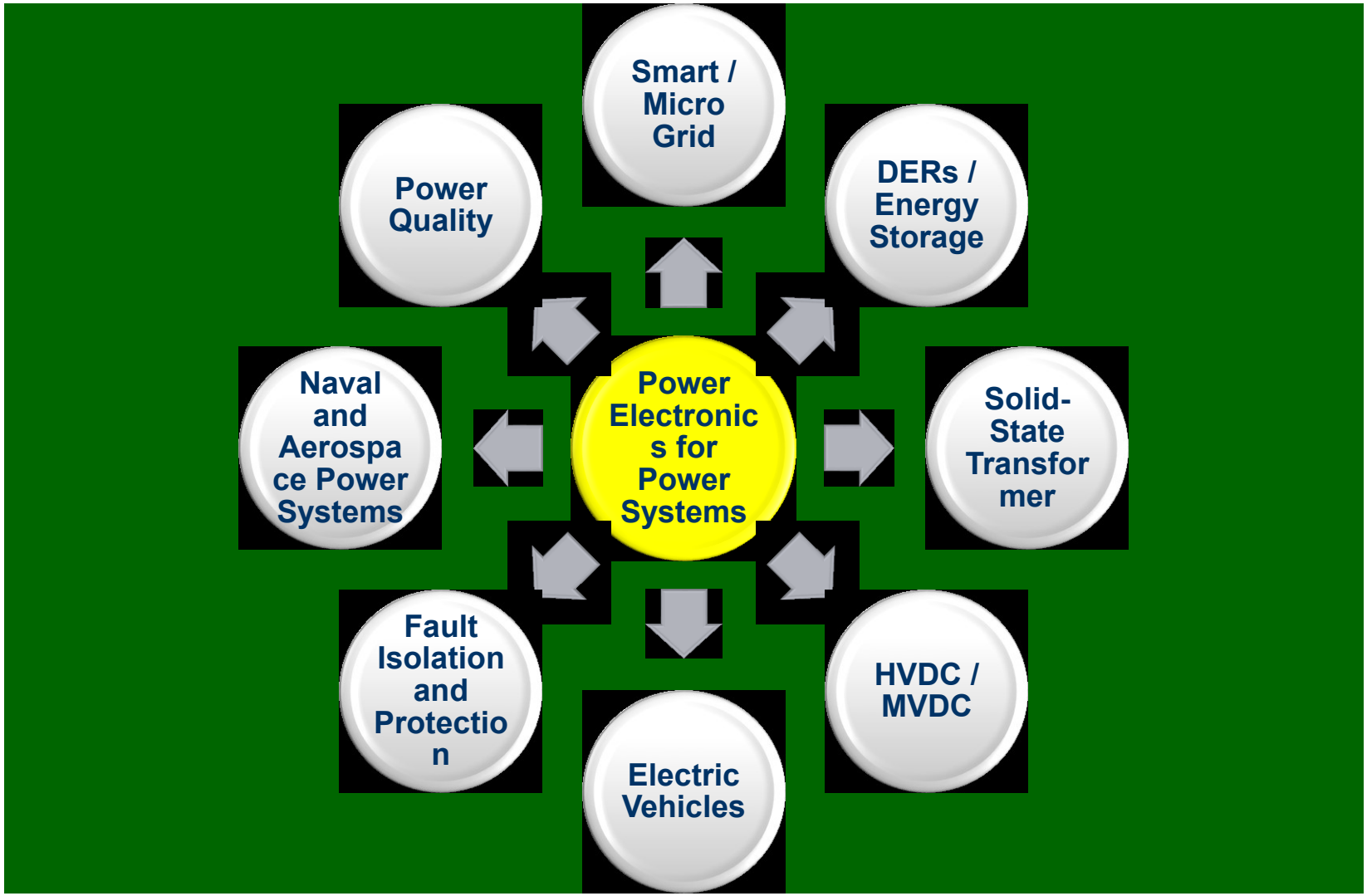

Some Basic Background about Power-Electronic Systems (PES) Control

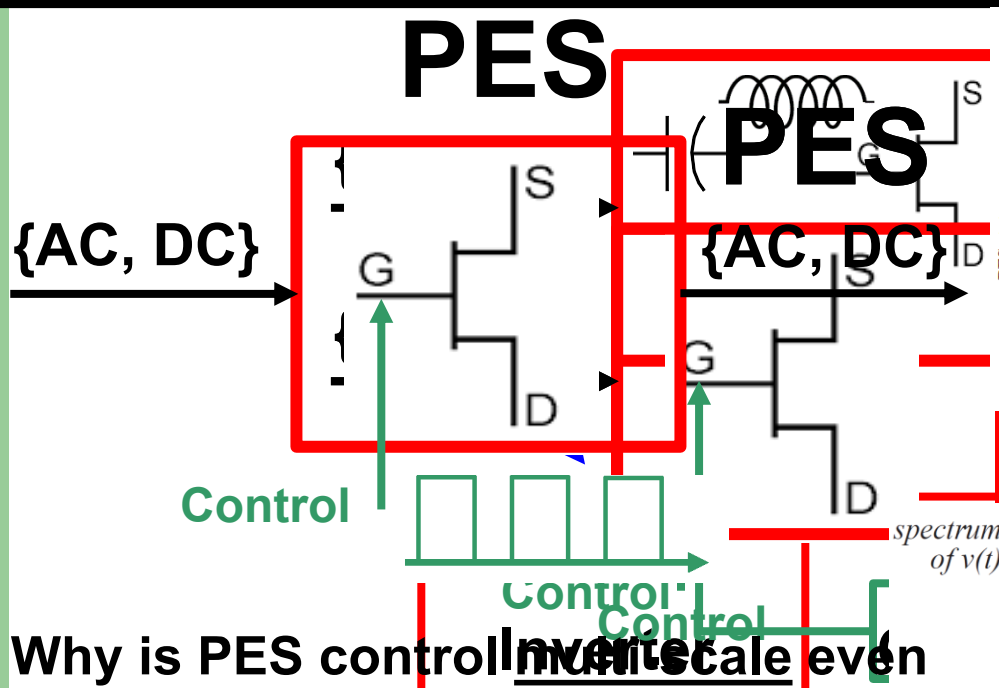

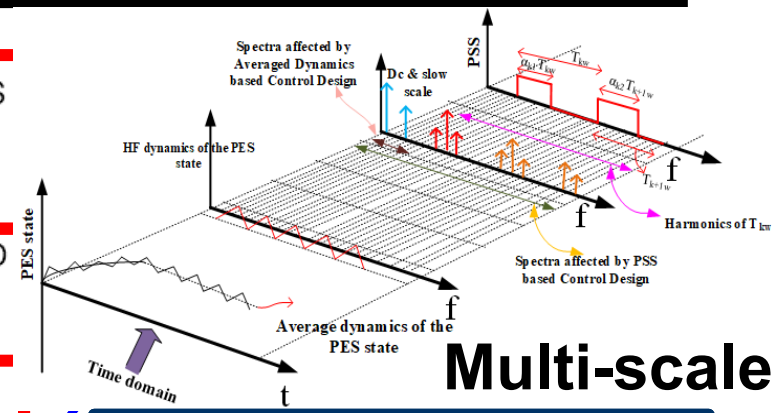

Multi-scale

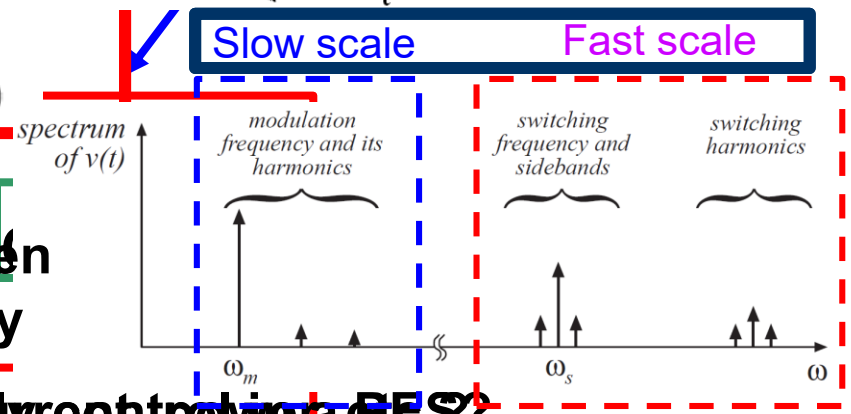

Why is PES control multi-scale even if the control objective(s) typically evolve(s) on mono-scale?

What about voltage, current, power, etc?

Because the semiconductor devices are switched under high control objectives with near-impulse transition that triggers almost broad-band response

Fast scale accounts for switching loss, EMI noise, device dv/dt and di/dt stress, edge-control bandwidth

Multi-scale Control Vision?

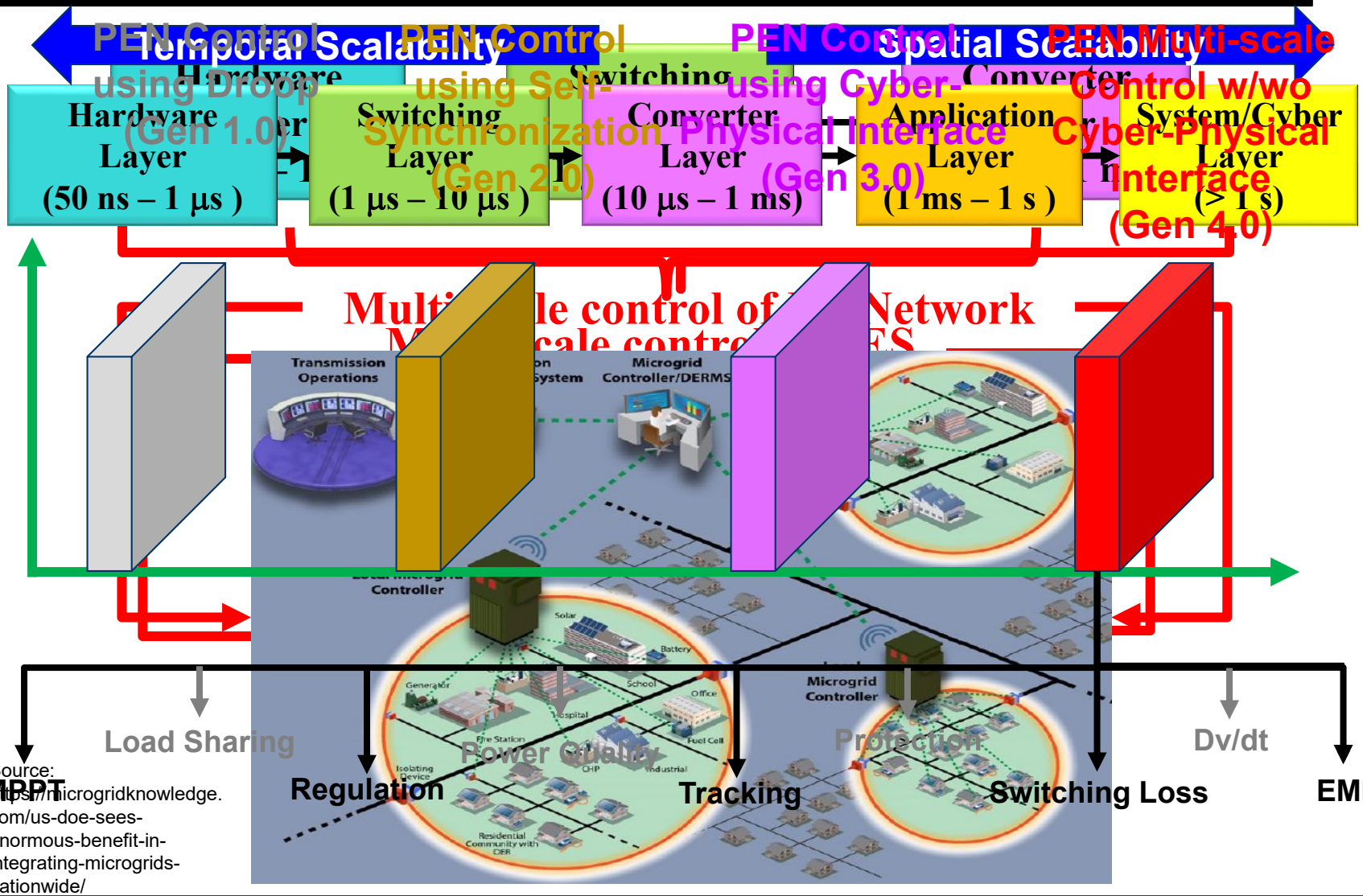

Source: https://microgridknowledge.com/us-doe-sees-enormous-benefit-in-integrating-microgrids-nationwide/

THANK YOU!

Sudip K. Mazumder (mazumder@uic.edu; +1 312-355-1315)
Fellow, IEEE
Distinguished Lecturer, IEEE Power Electronics Society
Editor-at-Large, IEEE Transactions on Power Electronics
Chair, IEEE PELS TC on Sustainable Energy Systems

Professor, Department of Electrical and Computer Engineering
Director, Laboratory for Energy and Switching-Electronic Systems
University of Illinois at Chicago

President, NextWatt LLC

Multi-scale Control of Power-electronic / Solid-state Transformer

WBG/NBG: Wide/Narrow Bandgap

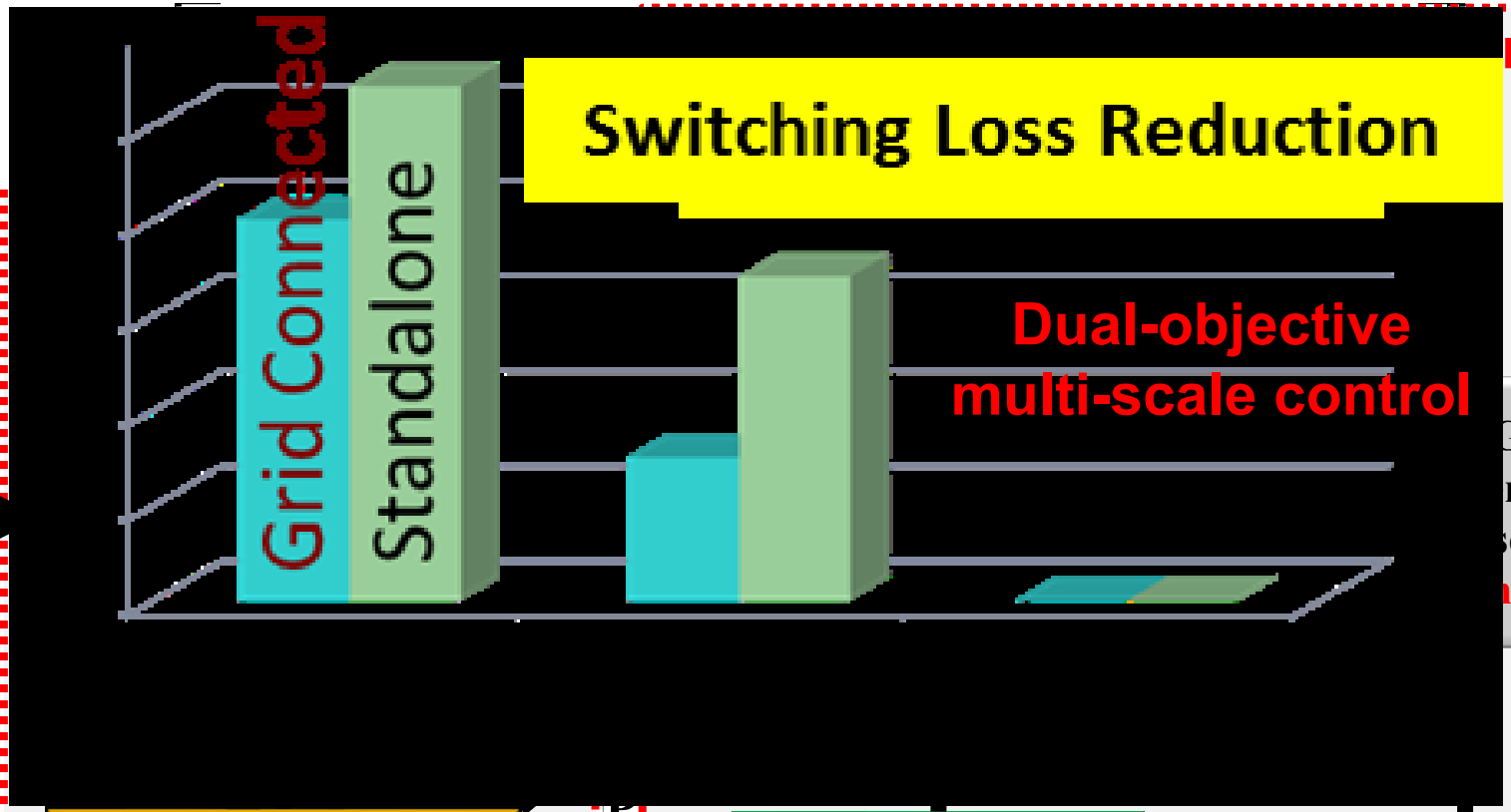

nline

G-PES
r
server
nal)

WBG/SBG-PES
Topological and
Switching Behaviors

LRR/SLRR: Voltage
regulation and
switching loss
reduction

VR: Voltage
regulation

WBG/NBG-PES
Discontinuous
Dynamical Model

Feedback and/or
Estimated Feedback

feasible switching sequences