Power Electronics-enabled Autonomous Power Systems: Synchronized and Democratized (SYNDEM) Smart Grids

Qing-Chang Zhong

Max McGraw Endowed Chair Professor in Energy and Power Engineering
Dept. of Electrical and Computer Engineering
Illinois Institute of Technology

Email: zhongqc@ieee.org

Power systems are being democratized ...

- Conventional large power plants, such as coal-fired and nuclear power plants, are going away.
  - Right after Fukushima, Germany shut down 8 of its oldest reactors and envisages to close the remaining 9 by 2022.
  - China closed or canceled 103 coal-fired power plants earlier this year. Dozens more coal-fired plants closed in the U.S. and India*.
  - In January 2018, UK announced to shut down all coal plants by 2025.
- More and more relatively small distributed generators, such as renewables, EVs and storage systems, are being added on to the grid.

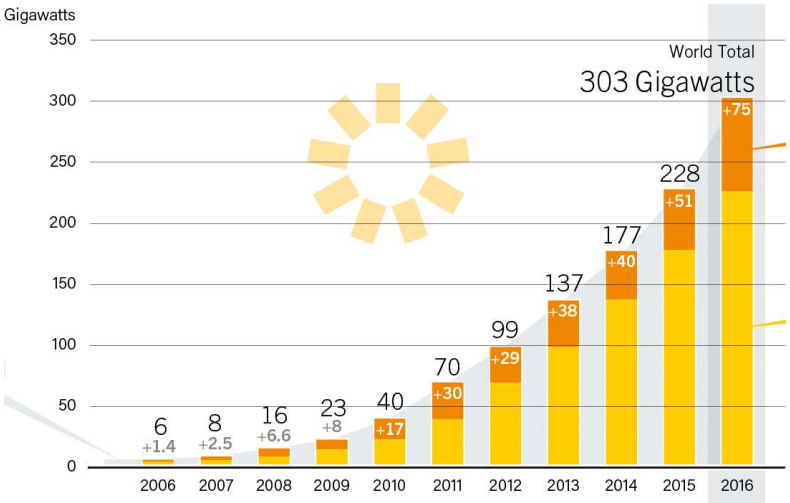

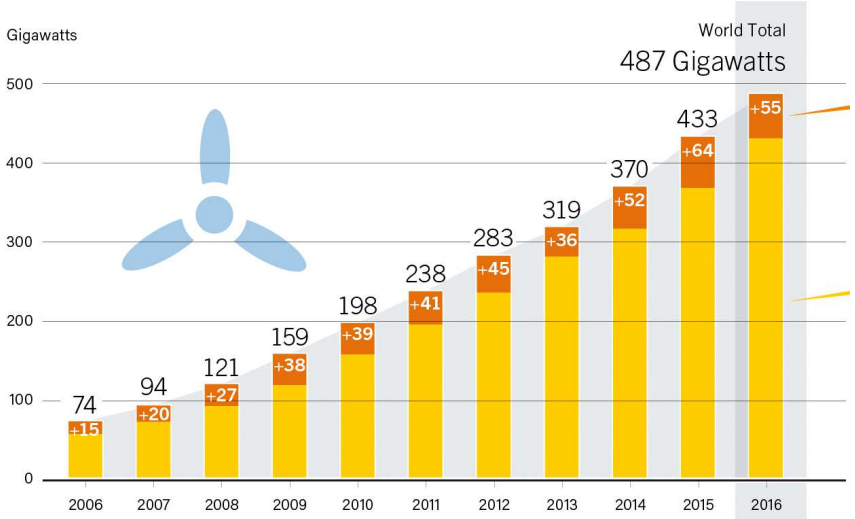

http://www.ren21.net/gsr-2017/.

*Keith Schneider, Massive Infrastructure Projects Are Failing at Unprecedented Rates, National Geographic, Nov. 20, 2017.

Unfortunately, more blackouts ...

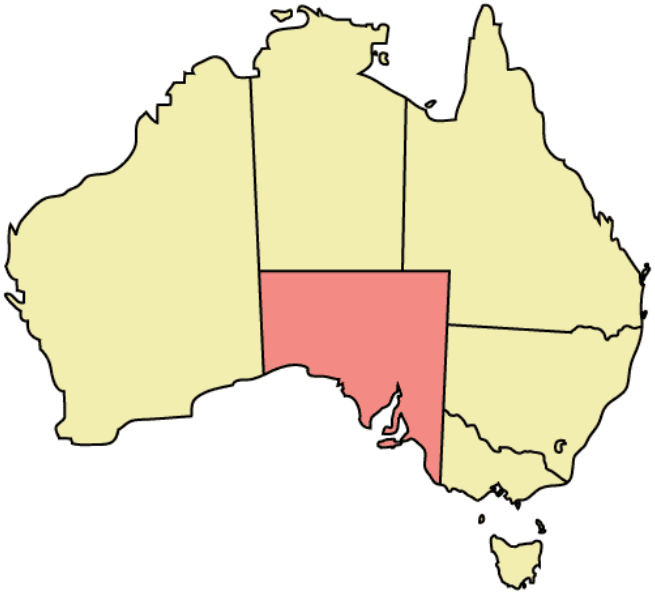

South Australia Blackout, Sept 28, 2016

affecting 850,000 customers

In both cases, wind farms played a role.

www.renewableenergyworld.com

BLACK SYSTEM SOUTH AUSTRALIA 28 SEPTEMBER 2016 – FINAL REPORT, 2017.

Unfortunately, more blackouts ...

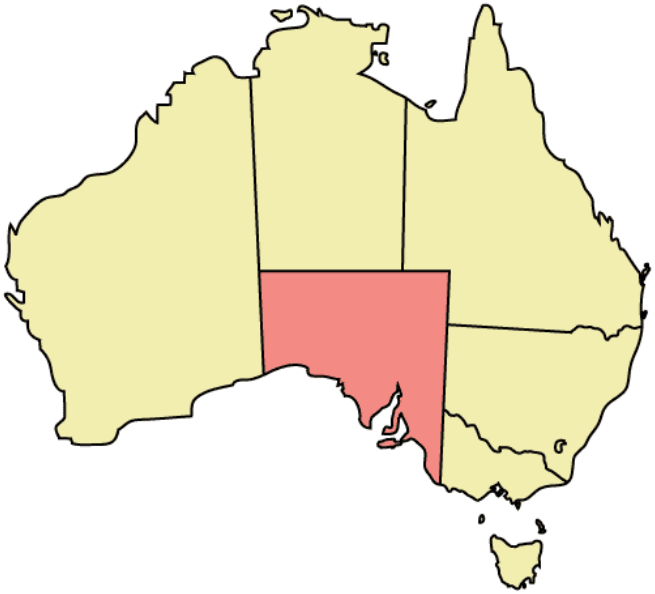

South Australia Blackout, Sept 28, 2016

affecting 850,000 customers

U.K. Blackout, August 9, 2019

affecting 1.1 million customers

In both cases, wind farms played a role.

www.renewableenergyworld.com

BLACK SYSTEM SOUTH AUSTRALIA 28 SEPTEMBER 2016 – FINAL REPORT, 2017.

Unfortunately, more blackouts ...

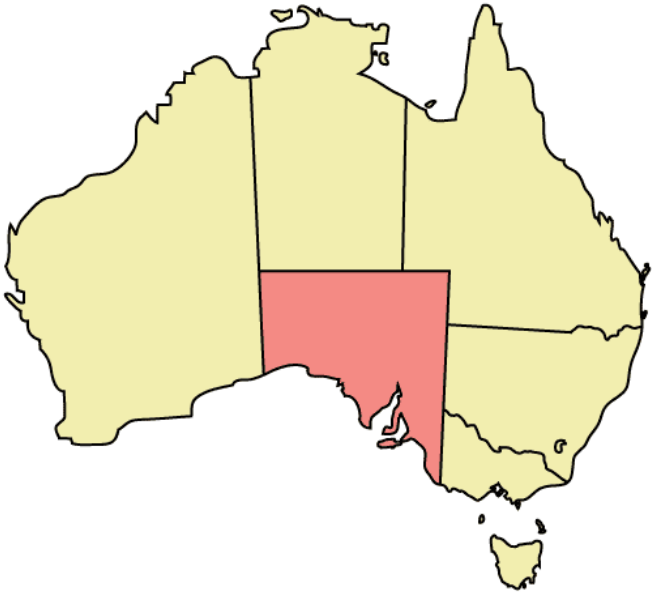

South Australia Blackout, Sept 28, 2016

affecting 850,000 customers

U.K. Blackout, August 9, 2019

affecting 1.1 million customers

In both cases, wind farms played a role.

www.renewableenergyworld.com

BLACK SYSTEM SOUTH AUSTRALIA 28 SEPTEMBER 2016 – FINAL REPORT, 2017.

How to keep our lights on

Outline of the talk

- The Fundamental Challenge in Power Systems
- The Concept of Synchronized and Democratized (SYNDEM) Smart Grid
  - Rule of Law
  - Legal Equality
- Enabling Technologies — Virtual Synchronous Machines
- SYNDEM Grid Architecture
- Summary

The fundamental challenge

Future power systems will be

power electronics-based, instead of electric machines-based,

with a huge number of non-synchronous incompatible players.

- This is less of a power problem but more of a systems problem: it is not about connecting one or two converters but about connecting millions without causing problems.
- We can no longer rely on communication networks
  - Reliability - April 1, 2019: Aerodata failure caused 3000 flights delays/cancellations
  - Cybersecurity - June 27, 2019: U.S. Senate passed a bill to protect our grid from cyberattacks

The fundamental challenge

Future power systems will be

power electronics-based, instead of electric machines-based,

with a huge number of non-synchronous incompatible players.

- This is less of a power problem but more of a systems problem: it is not about connecting one or two converters but about connecting millions without causing problems.
- We can no longer rely on communication networks
  - Reliability - April 1, 2019: Aerodata failure caused 3000 flights delays/cancellations
  - Cybersecurity - June 27, 2019: U.S. Senate passed a bill to protect our grid from cyberattacks

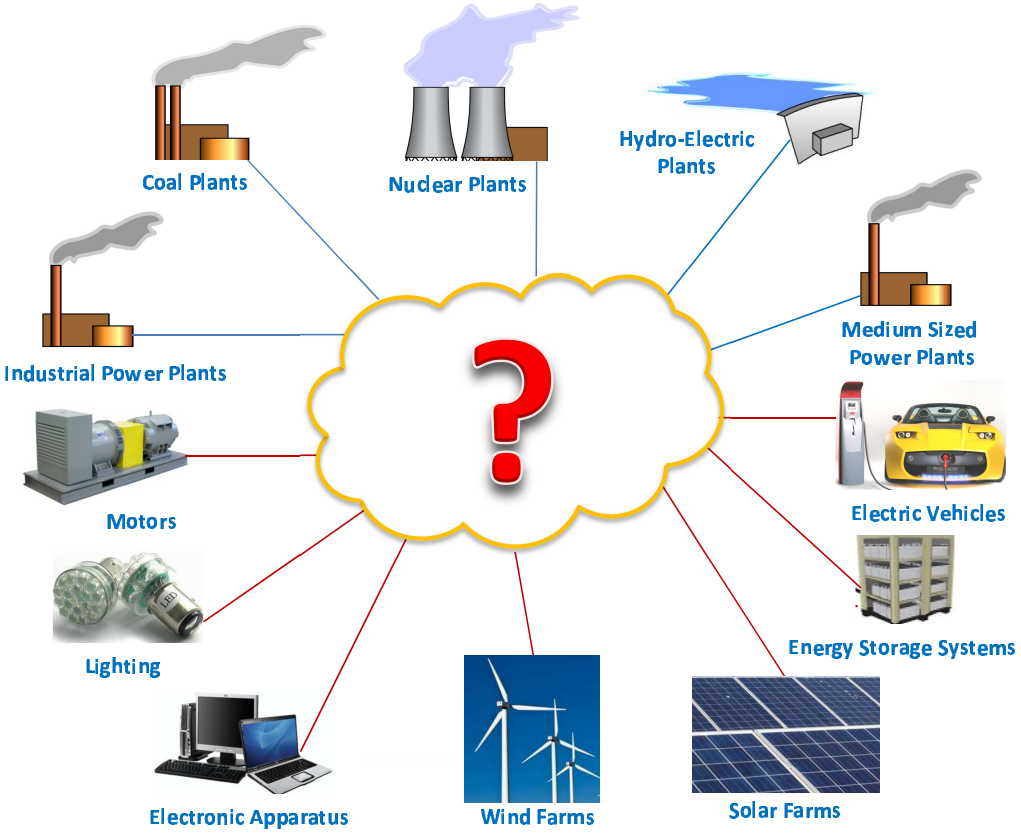

How are we going to operate power systems with millions of converters?

We need to better understand the root cause -

The democratization of power systems.

We need to better understand the root cause -

The democratization of power systems.

Democracy

Democracy is a political concept that empowers all eligible individuals to play an equal role in decision making.

However, significantly different or even divisive opinions could appear in a democratized society.

Democracy

Democracy is a political concept that empowers all eligible individuals to play an equal role in decision making.

However, significantly different or even divisive opinions could appear in a democratized society.

Two recent examples

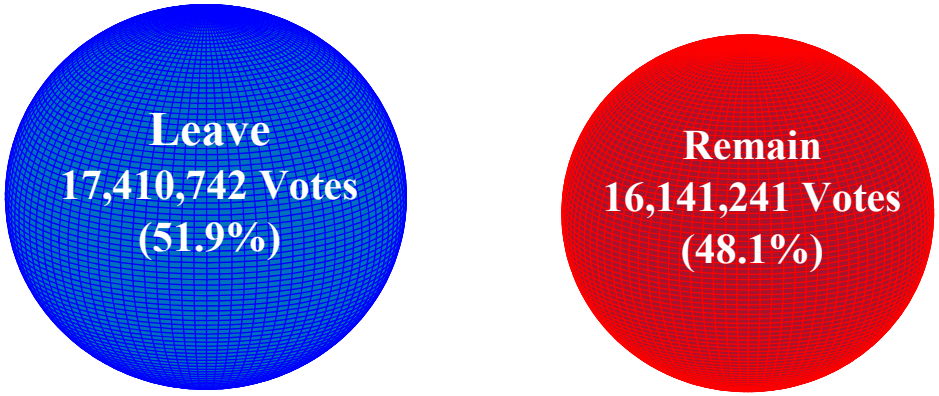

2016 UK Brexit Referendum

Two recent examples

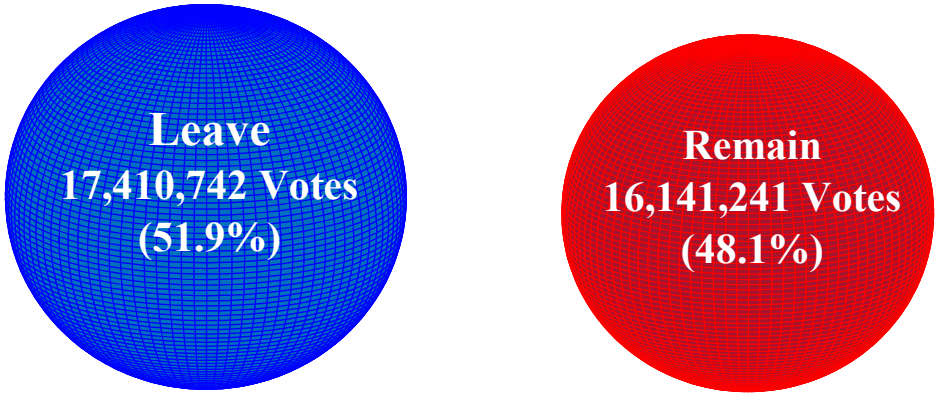

2016 UK Brexit Referendum

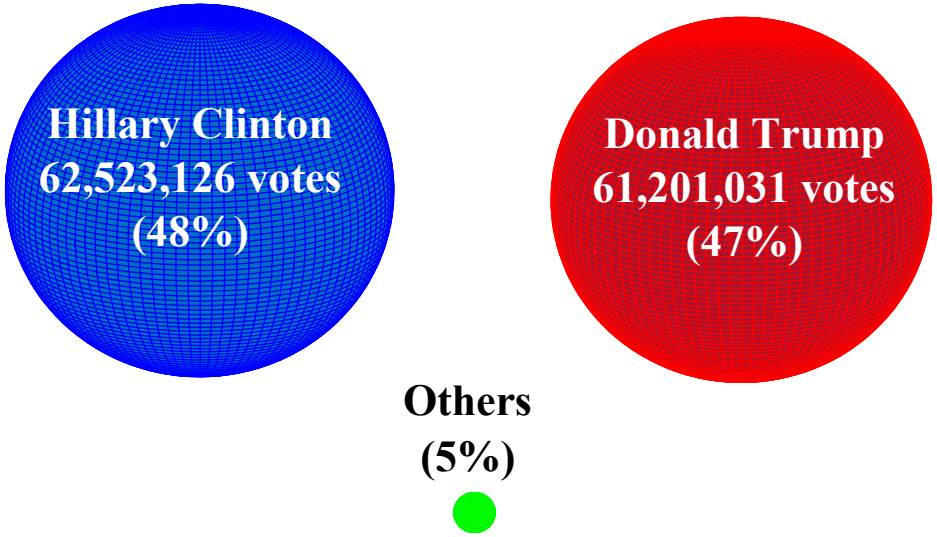

2016 US Presidential Election

This is not acceptable for power systems.

A power system has to maintain the stability of system frequency and voltage.

This is not acceptable for power systems.

A power system has to maintain the stability of system frequency and voltage.

The concept of SYNDEM

It is not enough just to democratize power systems; we also need all power system players to synchronize their actions for the same goal.

$\Downarrow$

Synchronization and Democratization (SYNDEM)

The concept of SYNDEM

It is not enough just to democratize power systems; we also need all power system players to synchronize their actions for the same goal.

$$\Downarrow$$

Synchronization and Democratization (SYNDEM)

Key features of a democratized society

Two important features:

- Rule of law: All players follow the same rule.
- Legal equality: All players are equal.

For a SYNDEM smart grid

- Rule of law:
  - Is there ONE simple mechanism for all power systems players to follow?
  - If yes, can this mechanism synchronize all the players?
- Legal equality:
  - There are many different players in a power system.
  - Is it possible for new add-ons of generators to play an equal role in regulating system stability?
  - Is it possible for most loads to play the same role too?
  - If yes, can we equalize all players regardless of size and capacity?

What rule has underpinned the operation and growth of power systems for over 100 years?

Conventional electricity generation

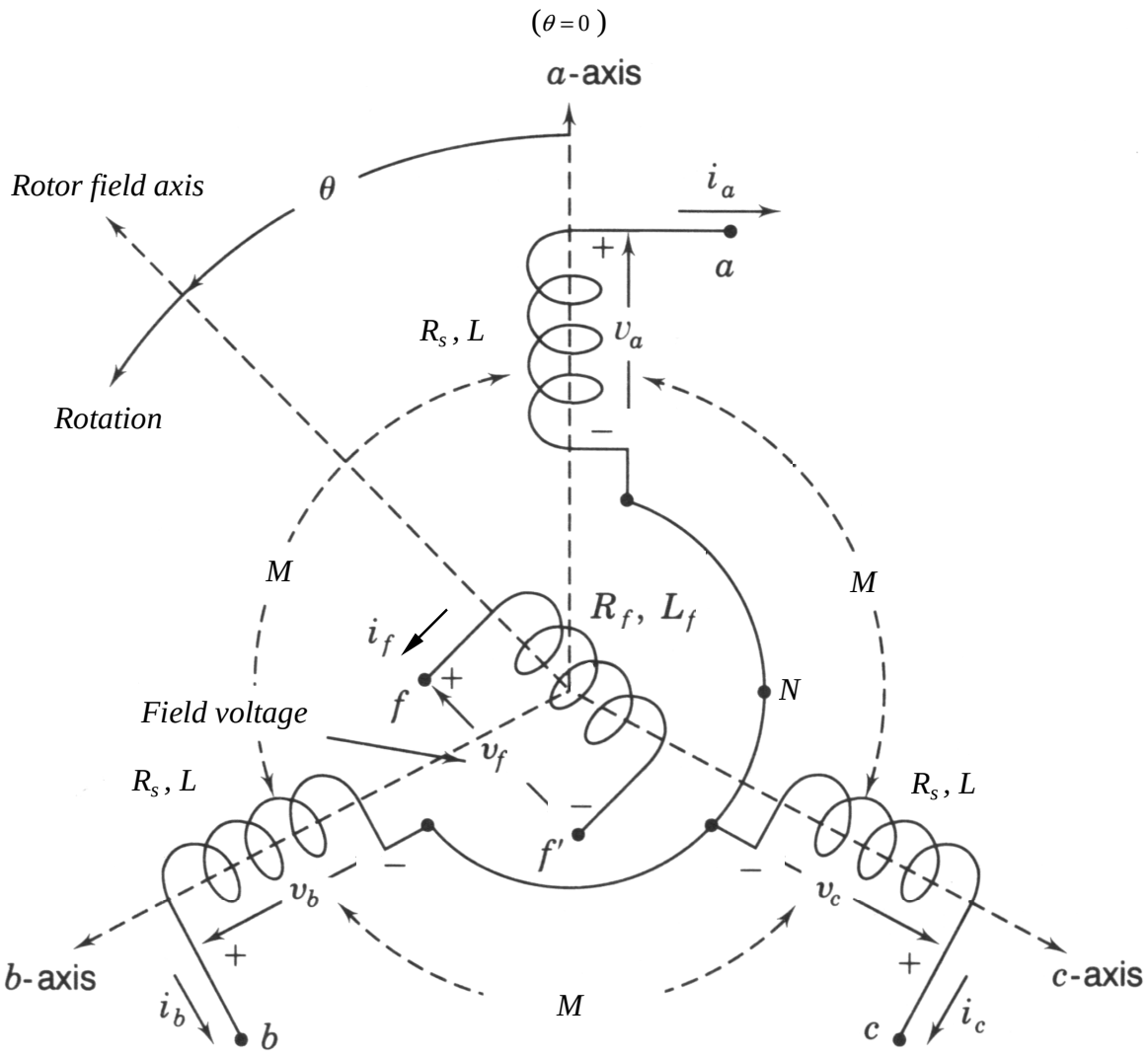

The generation of electricity is dominated by synchronous machines.

Why synchronous machines (SMs)?

- Synchronous machines have an intrinsic property, i.e., the synchronization mechanism.
- Synchronous machines can synchronize with each other or the grid, autonomously.

It is this intrinsic synchronization mechanism that has underpinned the operation and growth of power systems for over 100 years.

Why synchronous machines (SMs)?

- Synchronous machines have an intrinsic property, i.e., the synchronization mechanism.
- Synchronous machines can synchronize with each other or the grid, autonomously.

It is this intrinsic synchronization mechanism that has underpinned the operation and growth of power systems for over 100 years.

Why synchronous machines (SMs)?

- Synchronous machines have an intrinsic property, i.e., the synchronization mechanism.
- Synchronous machines can synchronize with each other or the grid, autonomously.

It is this intrinsic synchronization mechanism that has underpinned the operation and growth of power systems for over 100 years.

Rule of law for a SYNDEM smart grid

The synchronization mechanism of SM.

Now, let's look at the legal equality.

New add-ons of generation

- Renewable energy
  - Wind
  - Solar
  - Tide
  - Wave etc
- Electric vehicles
- Energy storage systems

Is there anything in common?

New add-ons of generation

- Renewable energy
  - Wind
  - Solar
  - Tide
  - Wave etc
- Electric vehicles
- Energy storage systems

Is there anything in common?

Power electronic inverters: Common devices for smart grid integration

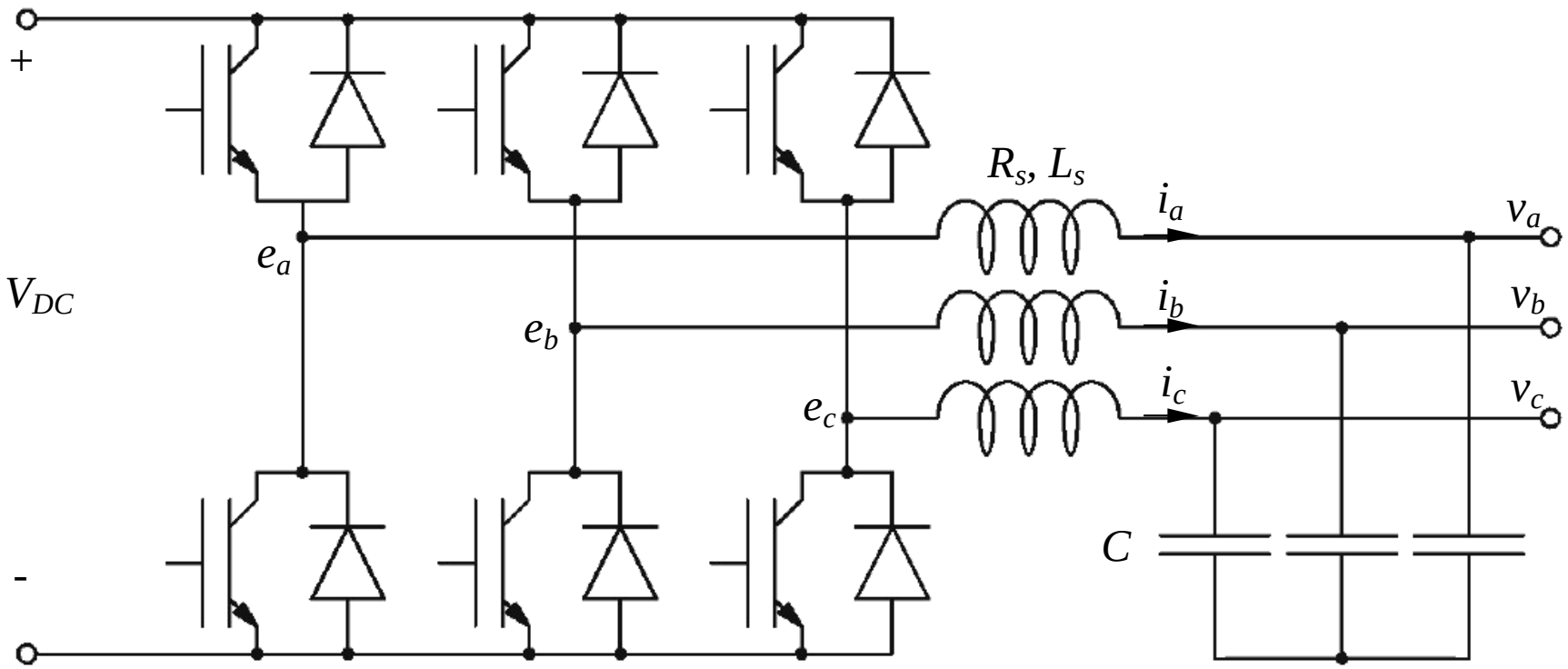

Can we equip inverters with the synchronization mechanism of SM?

Power electronic inverters: Common devices for smart grid integration

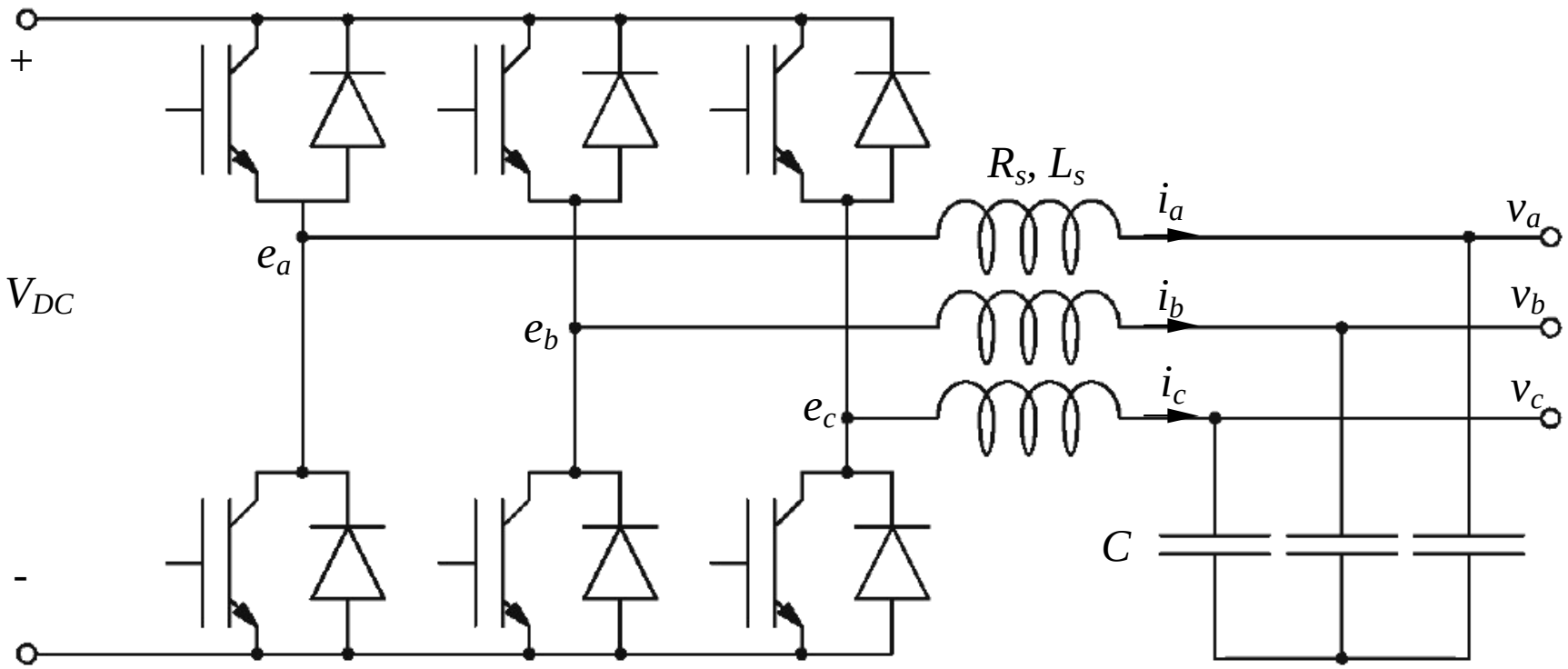

Can we equip inverters with the synchronization mechanism of SM?

Yes !

Virtual Synchronous Machines (VSM)

That is to operate power converters to have the internal dynamics and external properties of SMs.

- 1st Generation: Synchronverters
  - Basic, conceptual implementation
  - For converters with inductive impedance
  - Number of key control parameters: 4
- 2nd Generation: Universal droop controller
  - Universal for inverters with different types of impedances
  - Robust against parameter shifts, component mismatches etc.
  - Number of key control parameters: 3
- 3rd Generation: Cybersync machines
  - Guaranteed passivity (stability)
  - Number of key control parameters: 2

Virtual Synchronous Machines (VSM)

That is to operate power converters to have the internal dynamics and external properties of SMs.

- 1st Generation: Synchronverters
  - Basic, conceptual implementation
  - For converters with inductive impedance
  - Number of key control parameters: 4
- 2nd Generation: Universal droop controller
  - Universal for inverters with different types of impedances
  - Robust against parameter shifts, component mismatches etc.
  - Number of key control parameters: 3
- 3rd Generation: Cybersync machines
  - Guaranteed passivity (stability)
  - Number of key control parameters: 2

Virtual Synchronous Machines (VSM)

That is to operate power converters to have the internal dynamics and external properties of SMs.

- 1st Generation: Synchronverters
  - Basic, conceptual implementation
  - For converters with inductive impedance
  - Number of key control parameters: 4
- 2nd Generation: Universal droop controller
  - Universal for inverters with different types of impedances
  - Robust against parameter shifts, component mismatches etc.
  - Number of key control parameters: 3
- 3rd Generation: Cybersync machines
  - Guaranteed passivity (stability)
  - Number of key control parameters: 2

Virtual Synchronous Machines (VSM)

That is to operate power converters to have the internal dynamics and external properties of SMs.

- 1st Generation: Synchronverters
  - Basic, conceptual implementation
  - For converters with inductive impedance
  - Number of key control parameters: 4
- 2nd Generation: Universal droop controller
  - Universal for inverters with different types of impedances
  - Robust against parameter shifts, component mismatches etc.
  - Number of key control parameters: 3
- 3rd Generation: Cybersync machines
  - Guaranteed passivity (stability)
  - Number of key control parameters: 2

1G VSM: Synchronverters

- Take the mathematical model of a synchronous generator as the core of the controller for a converter.
- Convert the generated voltage e to PWM signals to drive the switches so that the average values of e_a, e_b and e_c over a switching period is equal to e.
- Feed back the phase current i to the mathematical model as the stator current.

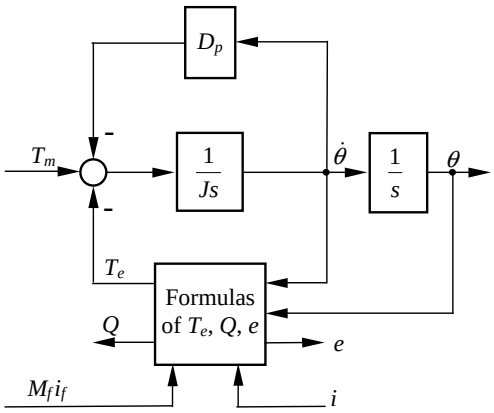

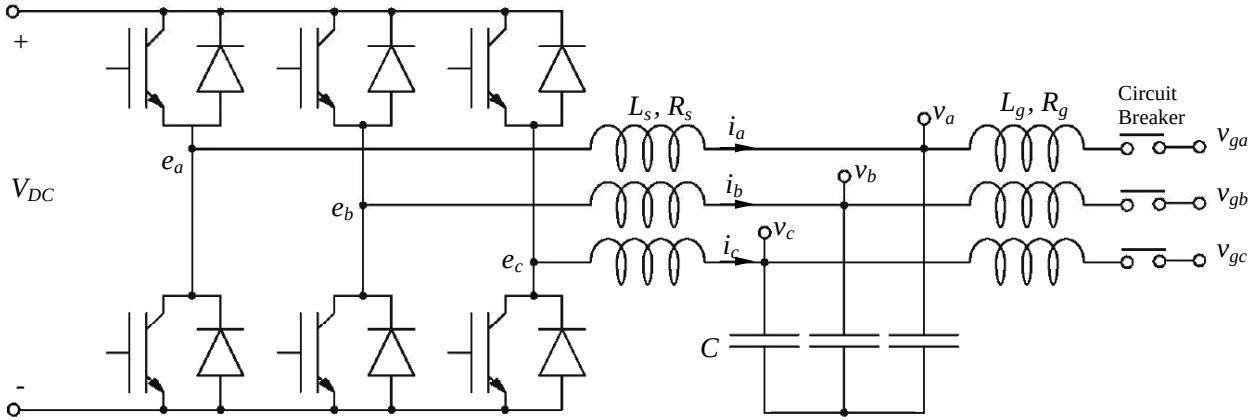

1G VSM: Synchronverters

- Take the mathematical model of a synchronous generator as the core of the controller for a converter.
- Convert the generated voltage e to PWM signals to drive the switches so that the average values of e_a, e_b and e_c over a switching period is equal to e.
- Feed back the phase current i to the mathematical model as the stator current.

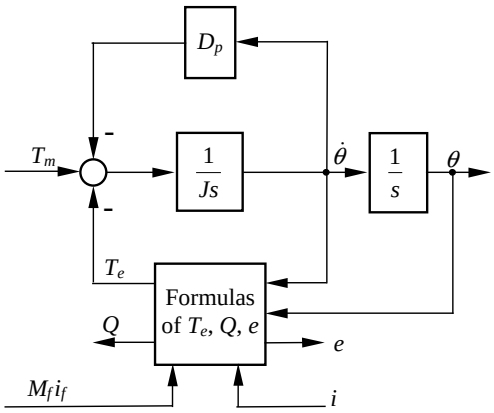

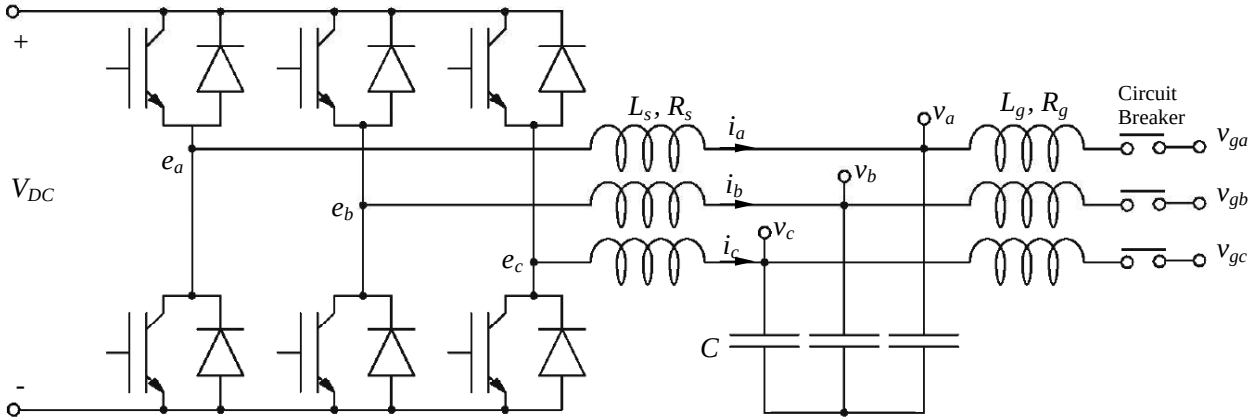

1G VSM: Synchronverters

- Take the mathematical model of a synchronous generator as the core of the controller for a converter.
- Convert the generated voltage e to PWM signals to drive the switches so that the average values of e_a, e_b and e_c over a switching period is equal to e.
- Feed back the phase current i to the mathematical model as the stator current.

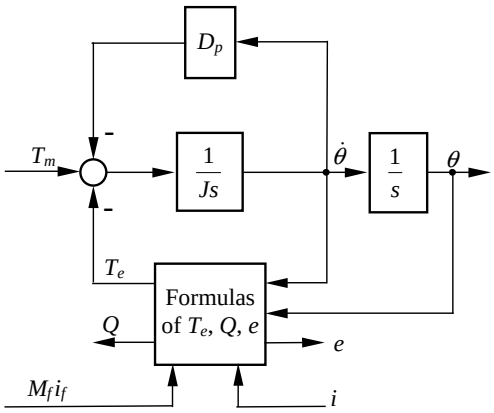

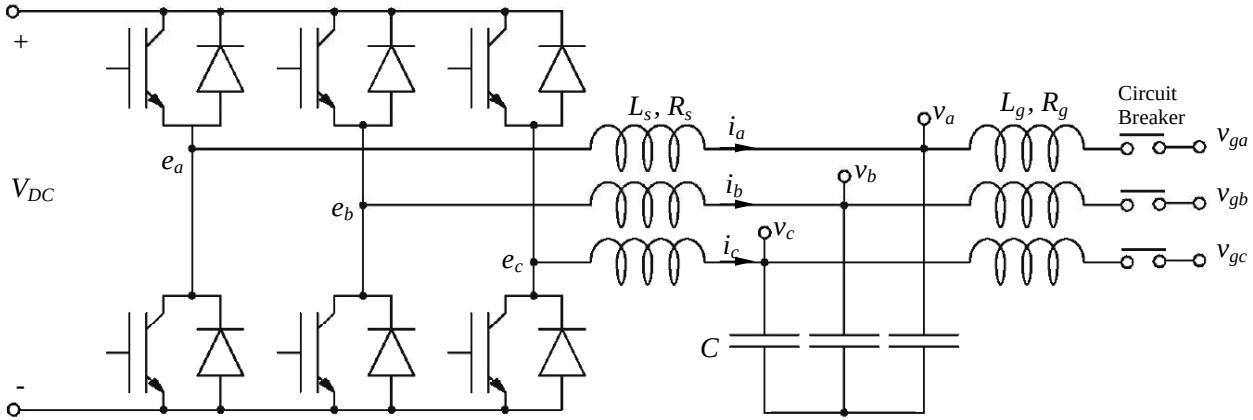

The complete controller of a synchronverter

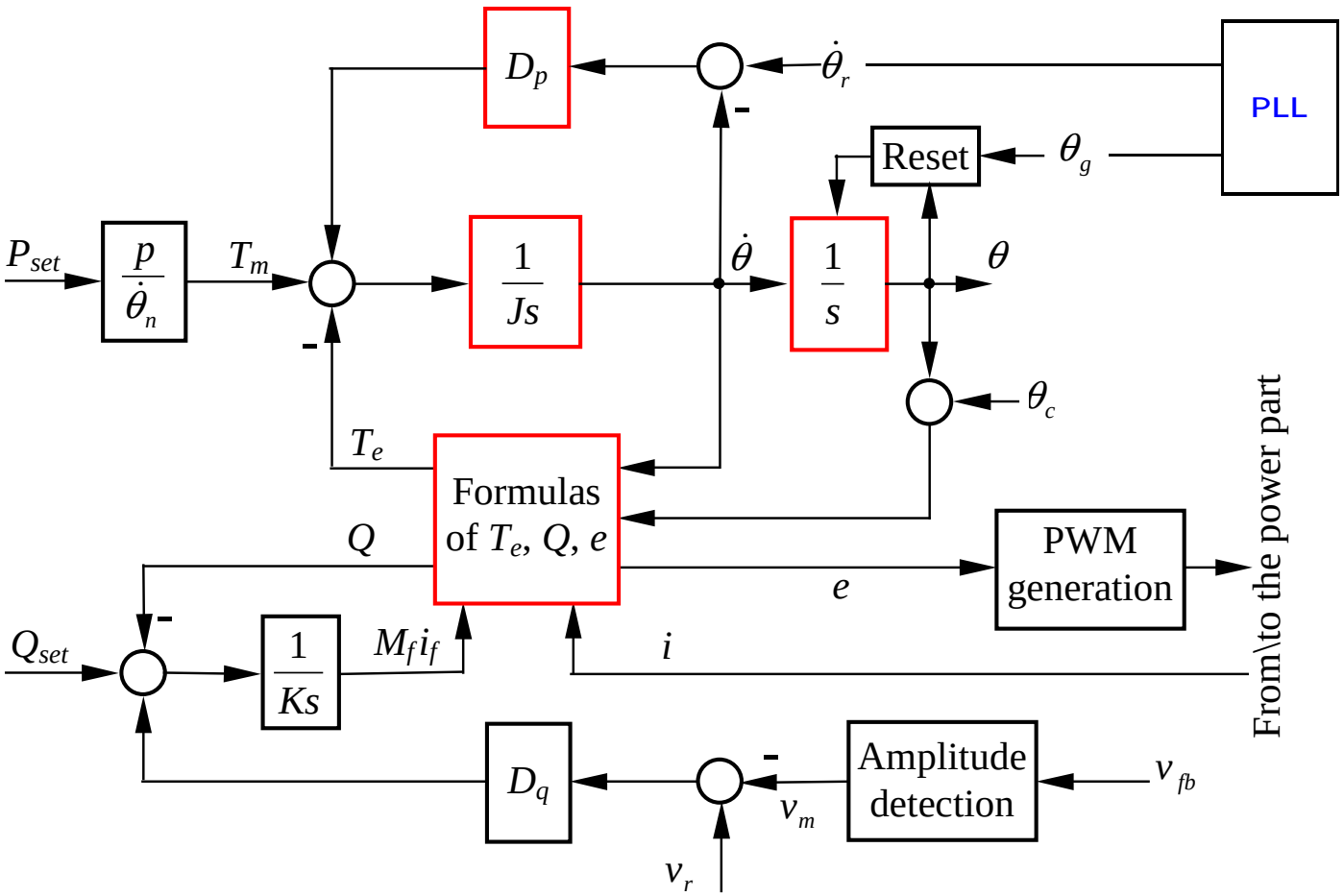

- Four parameters
- No conventional PI control
- No dq transformation etc
- Frequency regulation via frequency droop control
- Voltage regulation via voltage droop control
- Real power and reactive power control

Experimental results - Frequency regulation

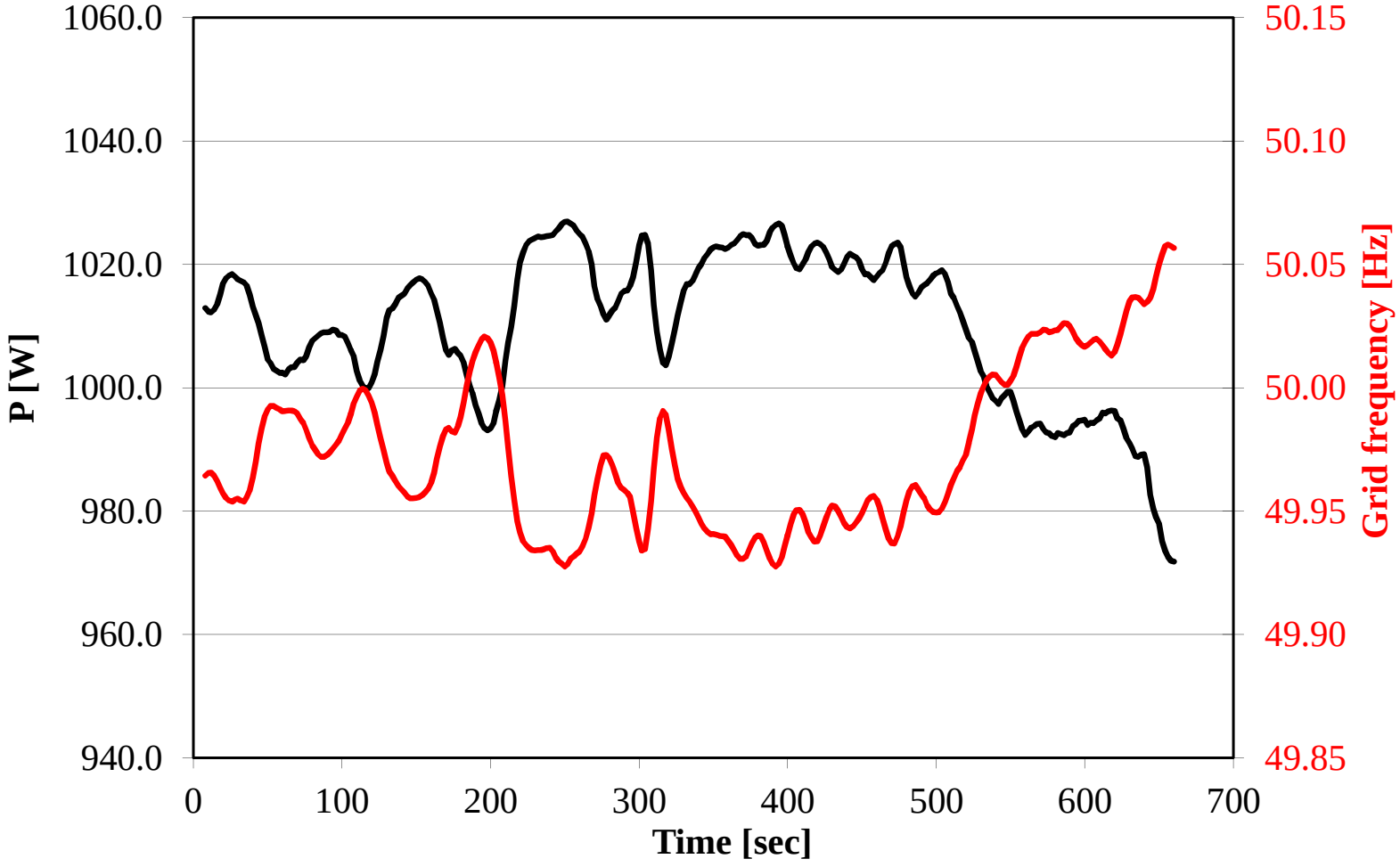

So, all generators can be harmonized with the intrinsic synchronization mechanism and equally take part in grid regulation.

How about the loads?

So, all generators can be harmonized with the intrinsic synchronization mechanism and equally take part in grid regulation.

How about the loads?

Load types

Many different types of loads exist in a power system:

- Home appliances
- Lighting devices
- Elevators
- Computers/servers
- Air-conditioners
- Machines
- ...

Is there anything in common?

Load types

Many different types of loads exist in a power system:

- Home appliances
- Lighting devices
- Elevators
- Computers/servers
- Air-conditioners
- Machines
- ...

Is there anything in common?

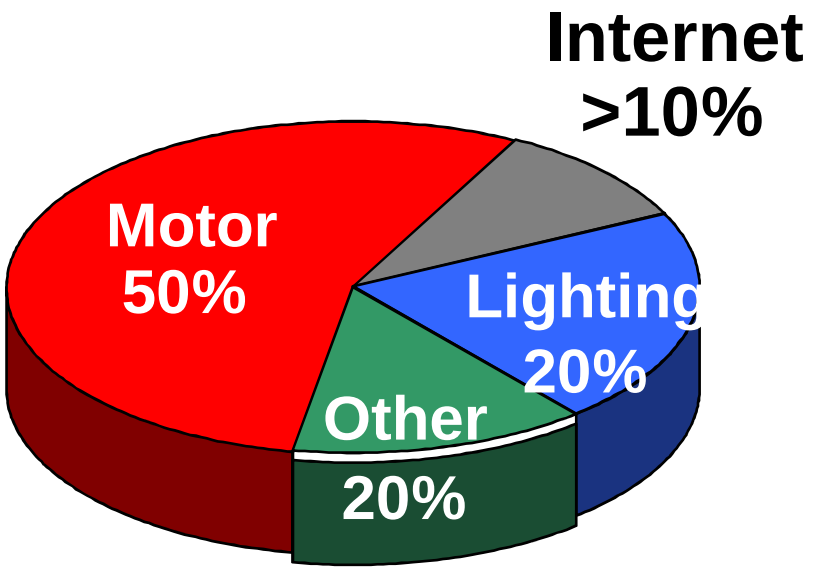

(EPRI)

Most loads (will) have a front-end rectifier because

- Motors are often equipped with AC drives to improve efficiency and performance
- Internet devices consume DC electricity
- Light bulbs are being replaced with LED lights

If these loads (rectifiers) are made to behave like synchronous motors then most loads will have the synchronization mechanism we need.

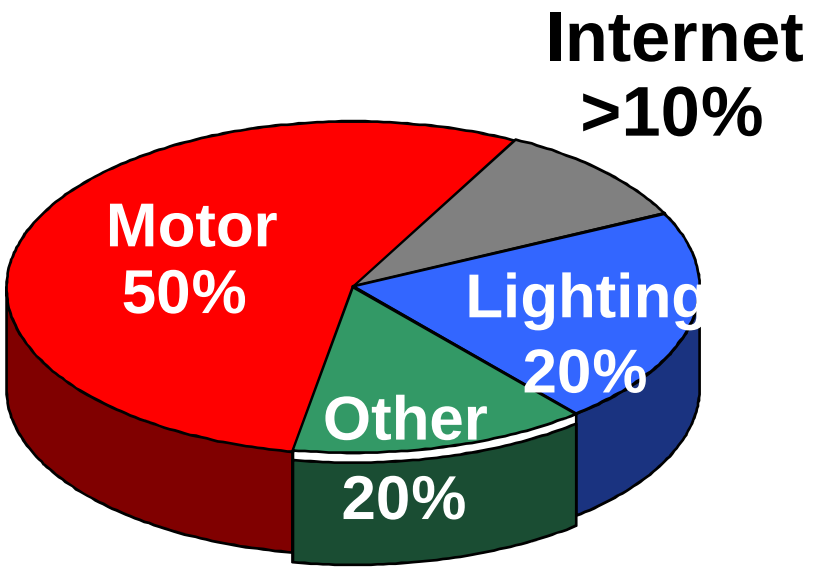

(EPRI)

Most loads (will) have a front-end rectifier because

- Motors are often equipped with AC drives to improve efficiency and performance
- Internet devices consume DC electricity
- Light bulbs are being replaced with LED lights

If these loads (rectifiers) are made to behave like synchronous motors then most loads will have the synchronization mechanism we need.

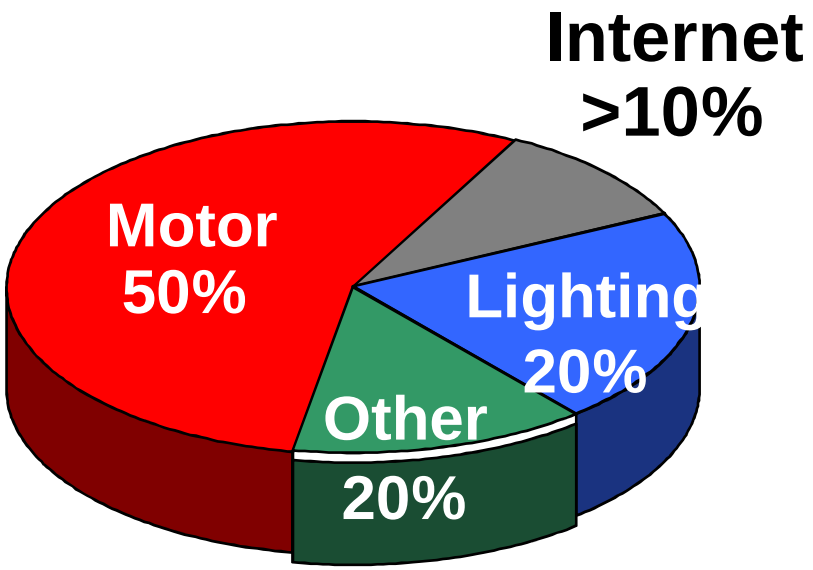

(EPRI)

Most loads (will) have a front-end rectifier because

- Motors are often equipped with AC drives to improve efficiency and performance
- Internet devices consume DC electricity
- Light bulbs are being replaced with LED lights

If these loads (rectifiers) are made to behave like synchronous motors then most loads will have the synchronization mechanism we need.

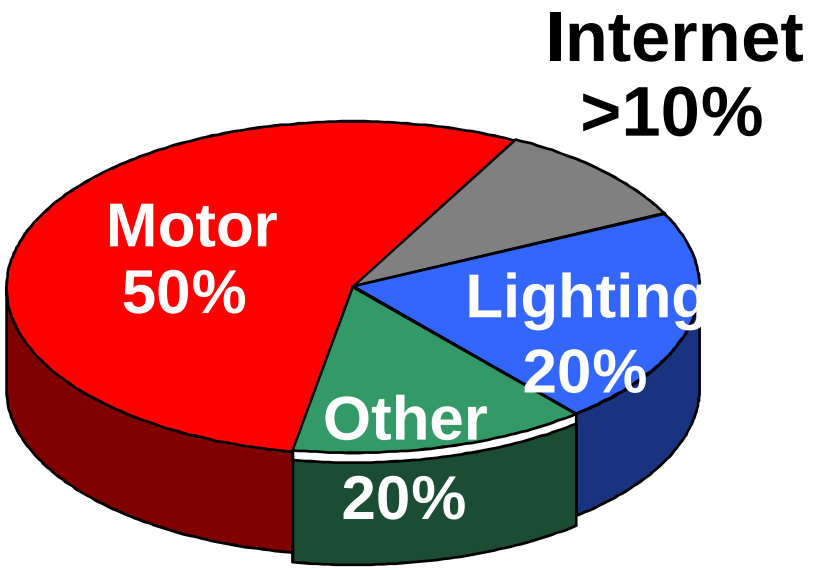

(EPRI)

Most loads (will) have a front-end rectifier because

- Motors are often equipped with AC drives to improve efficiency and performance
- Internet devices consume DC electricity
- Light bulbs are being replaced with LED lights

If these loads (rectifiers) are made to behave like synchronous motors then most loads will have the synchronization mechanism we need.

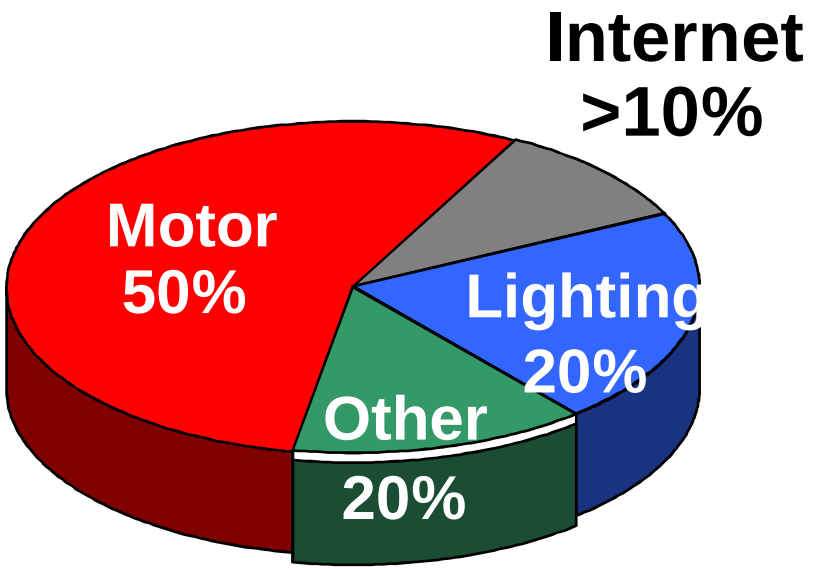

(EPRI)

Most loads (will) have a front-end rectifier because

- Motors are often equipped with AC drives to improve efficiency and performance
- Internet devices consume DC electricity
- Light bulbs are being replaced with LED lights

If these loads (rectifiers) are made to behave like synchronous motors then most loads will have the synchronization mechanism we need.

Running rectifiers as synchronous motors

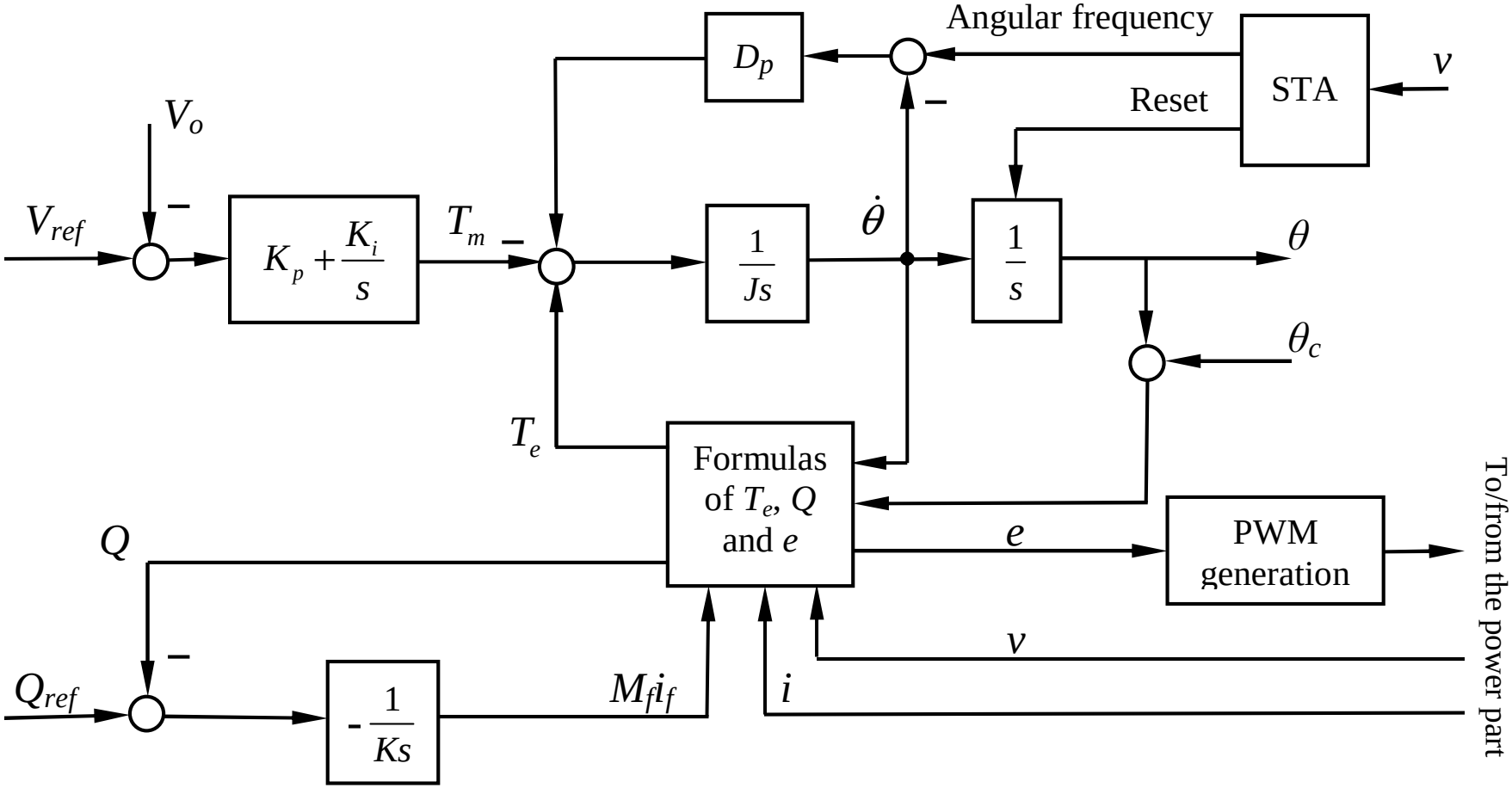

Experimental results

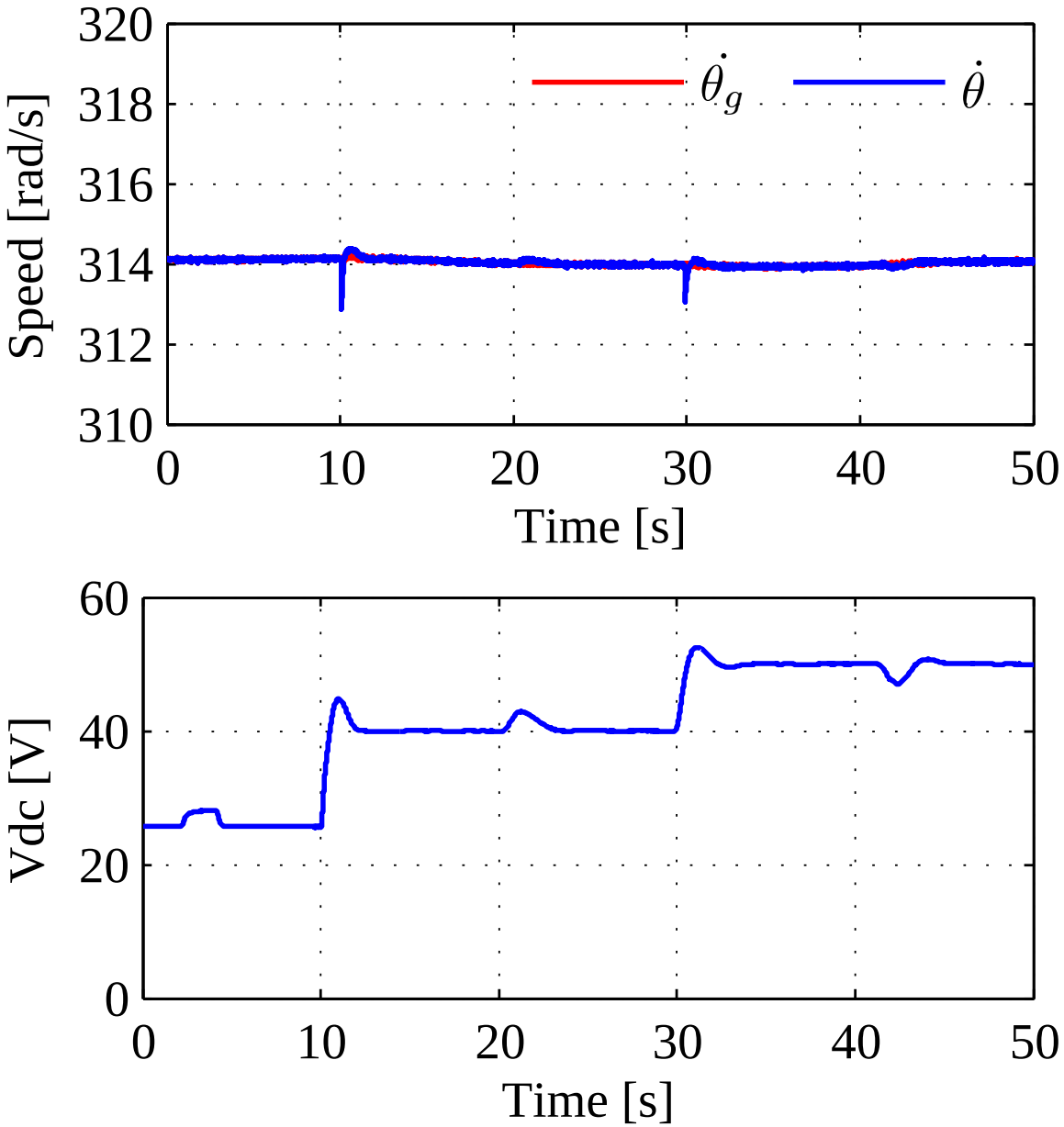

So, we have achieved legal equality!

- Whether conventional or new add-on generators
- Whether generators or loads
- Whether large or small

They can all behave like (virtual) SM and follow the same rule of law: the synchronization mechanism.

So, we have achieved legal equality!

- Whether conventional or new add-on generators
- Whether generators or loads
- Whether large or small

They can all behave like (virtual) SM and follow the same rule of law: the synchronization mechanism.

The SYNDEM architecture for next-generation smart grids

SYNDEM architecture for next-generation smart grids

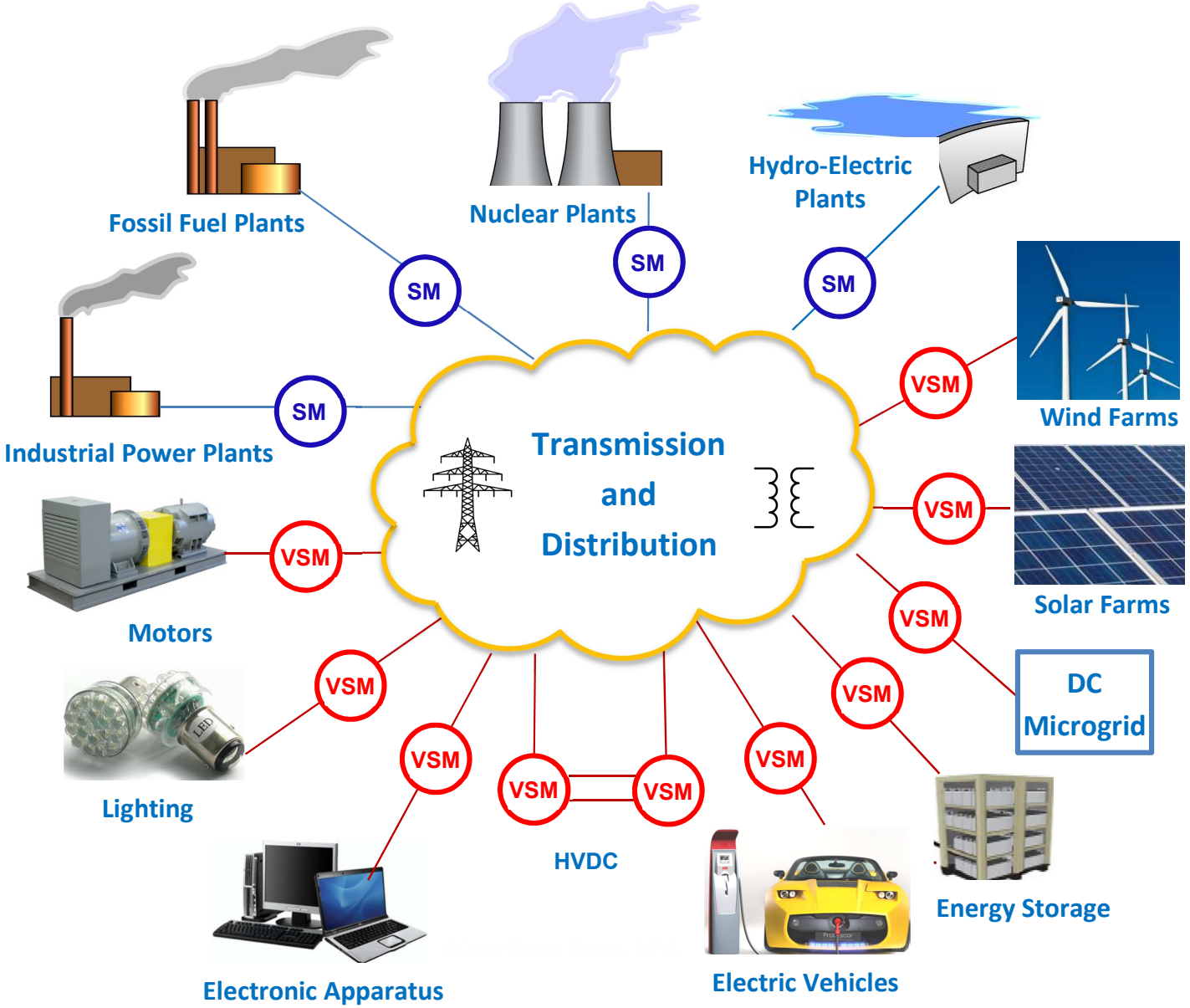

Benefits of a SYNDEM Smart Grid

- All generators and most loads, not just large generators, autonomously take part in system regulation and provide primary frequency response, improving stability

Benefits of a SYNDEM Smart Grid

- All generators and most loads, not just large generators, autonomously take part in system regulation and provide primary frequency response, improving stability

Benefits of a SYNDEM Smart Grid

- All generators and most loads, not just large generators, autonomously take part in system regulation and provide primary frequency response, improving stability
- The low-level control works without communication networks, significantly improving reliability and cybersecurity

Benefits of a SYNDEM Smart Grid

- All generators and most loads, not just large generators, autonomously take part in system regulation and provide primary frequency response, improving stability
- The low-level control works without communication networks, significantly improving reliability and cybersecurity
- VSMs are power electronic converters, which can quickly respond to disturbances without delay, enhancing resiliency

Benefits of a SYNDEM Smart Grid

- All generators and most loads, not just large generators, autonomously take part in system regulation and provide primary frequency response, improving stability
- The low-level control works without communication networks, significantly improving reliability and cybersecurity
- VSMs are power electronic converters, which can quickly respond to disturbances without delay, enhancing resiliency
- VSMs only require local information, achieving genuine plug-and-play

Benefits of a SYNDEM Smart Grid

- All generators and most loads, not just large generators, autonomously take part in system regulation and provide primary frequency response, improving stability
- The low-level control works without communication networks, significantly improving reliability and cybersecurity
- VSMs are power electronic converters, which can quickly respond to disturbances without delay, enhancing resiliency
- VSMs only require local information, achieving genuine plug-and-play
- The additional hardware cost incurred is negligible, bringing economic viability

Benefits of a SYNDEM Smart Grid

- All generators and most loads, not just large generators, autonomously take part in system regulation and provide primary frequency response, improving stability
- The low-level control works without communication networks, significantly improving reliability and cybersecurity
- VSMs are power electronic converters, which can quickly respond to disturbances without delay, enhancing resiliency
- VSMs only require local information, achieving genuine plug-and-play
- The additional hardware cost incurred is negligible, bringing economic viability
- It harmonizes the grid integration of renewable energy sources, contributing to sustainability

SYNDEM grids are scalable

- Home grids
- Neighborhood grids
- Community grids
- District grids
- Regional grids

SYNDEM home grid

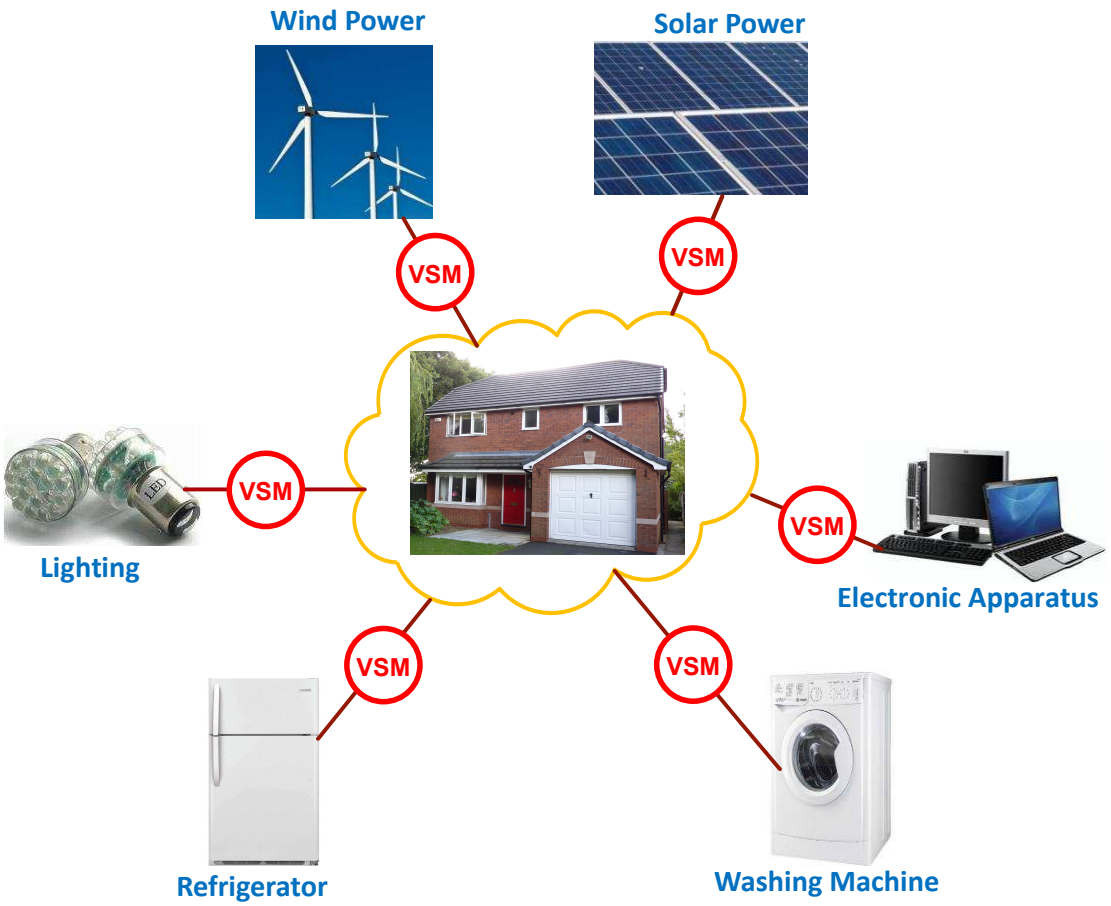

SYNDEM neighborhood grid

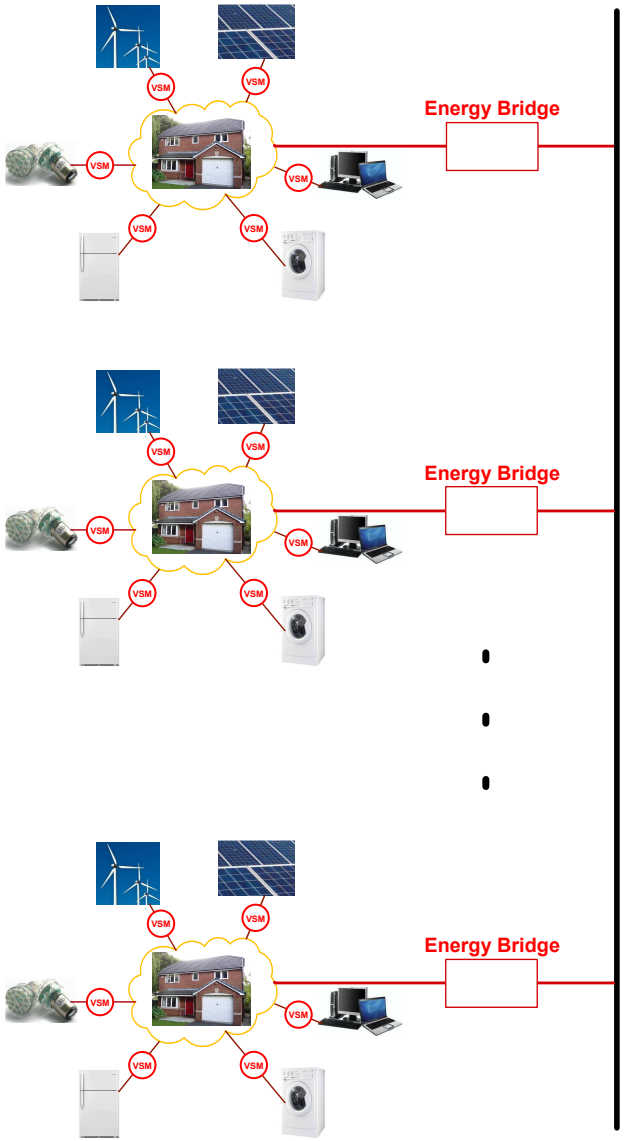

SYNDEM community grid

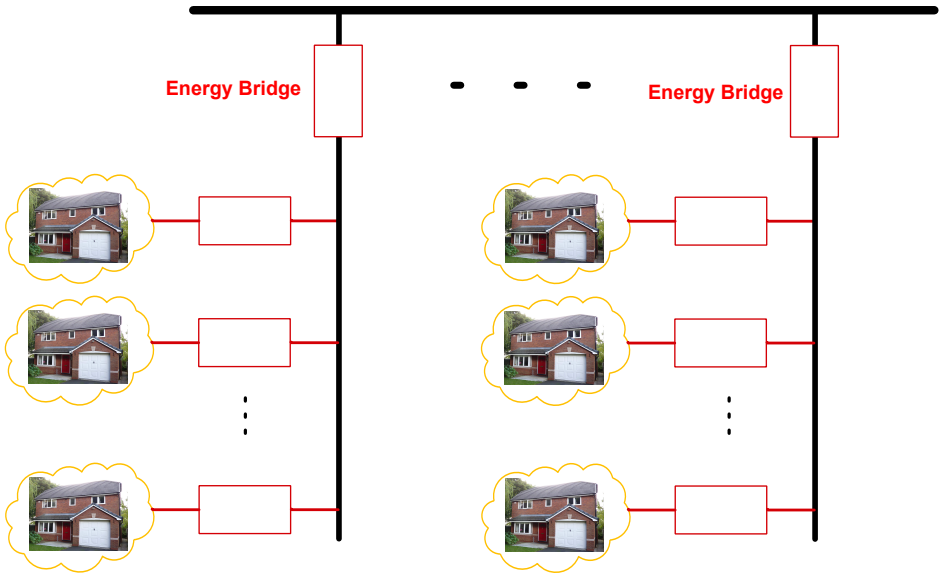

SYNDEM district grid

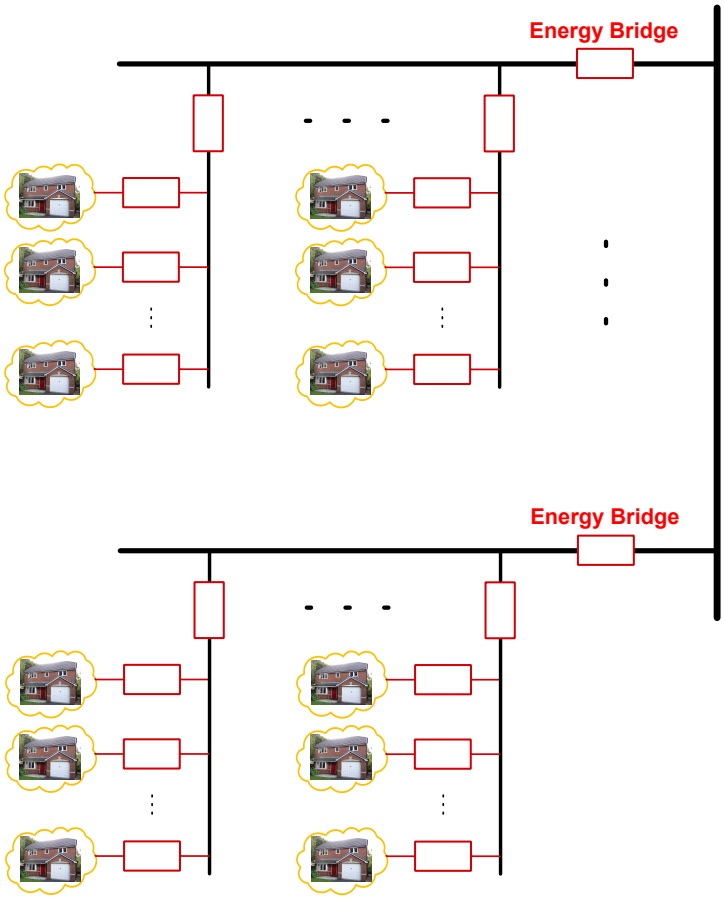

SYNDEM regional grid

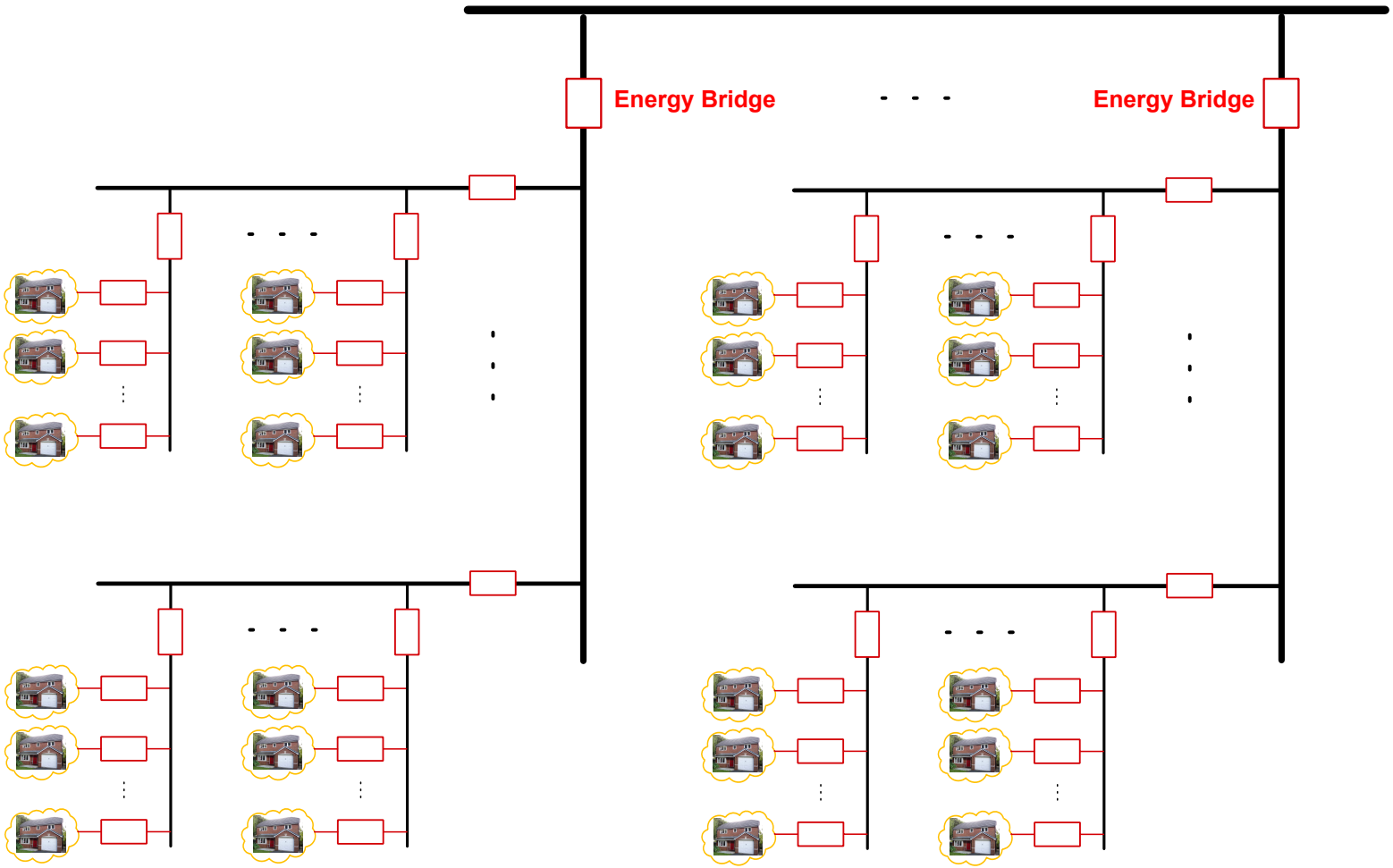

Some latest developments

- Self-synchronization without a phase-locked loop (PLL)
- Mathematically proven why we can get rid of PLLs
- Characterized the stability region of synchronverters
- Developed a strategy to limit currents at all time, even under grid faults
- ...

Further reading

(to appear in early 2020)

Summary

- Future power systems will be power electronics based, instead of electrical machines based, with a huge number of non-synchronous players.
- In order to guarantee stability, power systems players should be synchronized as well, leading to synchronized and democratized (SYNDEM) smart grids.
- The synchronization mechanism of SM can continue to be adopted to synchronize non-synchronous players, via operating power electronic converters as VSM.
- Three generations of VSM technologies:
  - 1G: Synchronverters (basic, conceptual)
  - 2G: Robust droop controllers (universal)
  - 3G: Cybersync machines (passive)

Conclusions

The future is brighter than today -
Power systems can be harmonized!

Thank you very much.

zhongqc@ieee.org

Conclusions

The future is brighter than today -
Power systems can be harmonized!

Thank you very much.

zhongqc@ieee.org